Seismic performance of hollowcore

Gabriel Tarţa

CES Romania

INTERNATIONAL PRESTRESSED HOLLOWCORE ASSOCIATION

in cooperation with StruSoft

Summary

- Earthquakes
- Development of seismic design
- Seismic load
- Earthquake resistant buildings
- Design of hollowcore diaphragms
- Topping?
- Potential failure modes

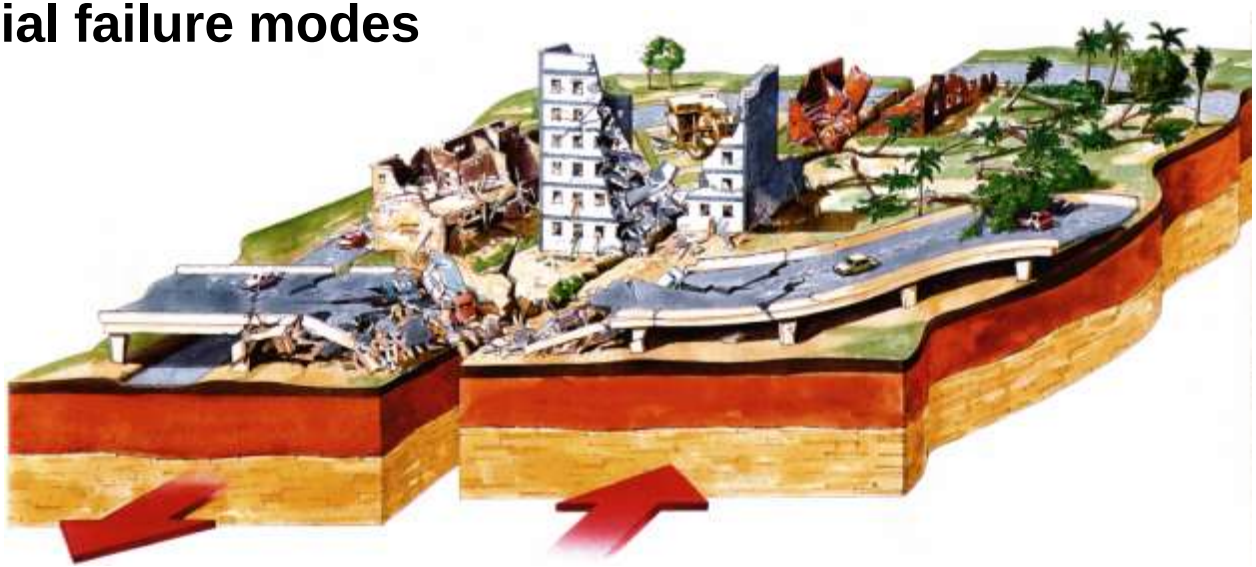

Earthquakes of 20th Century

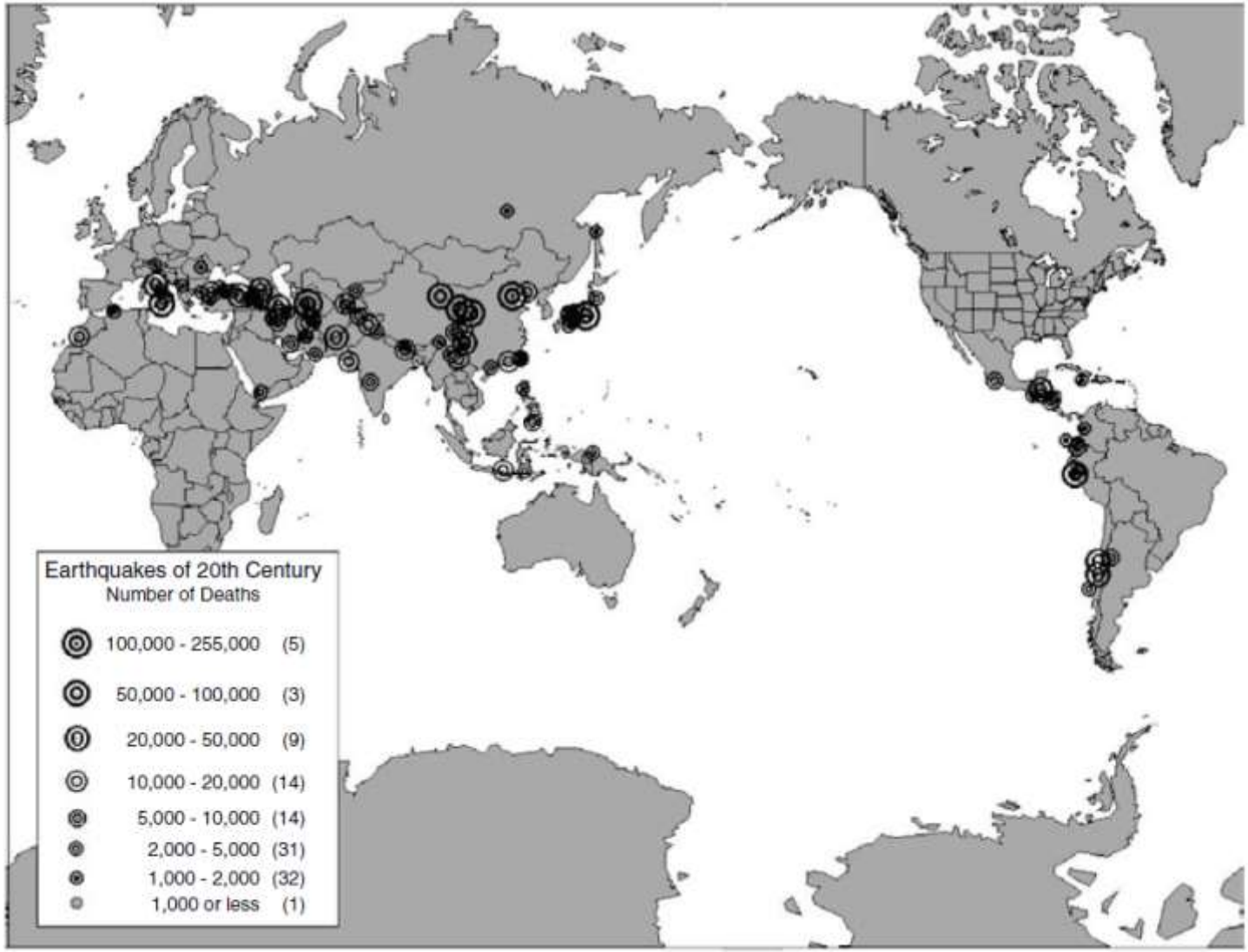

Earthquake casualties & economic losses

- Twentieth century global earthquake fatalities, by decade

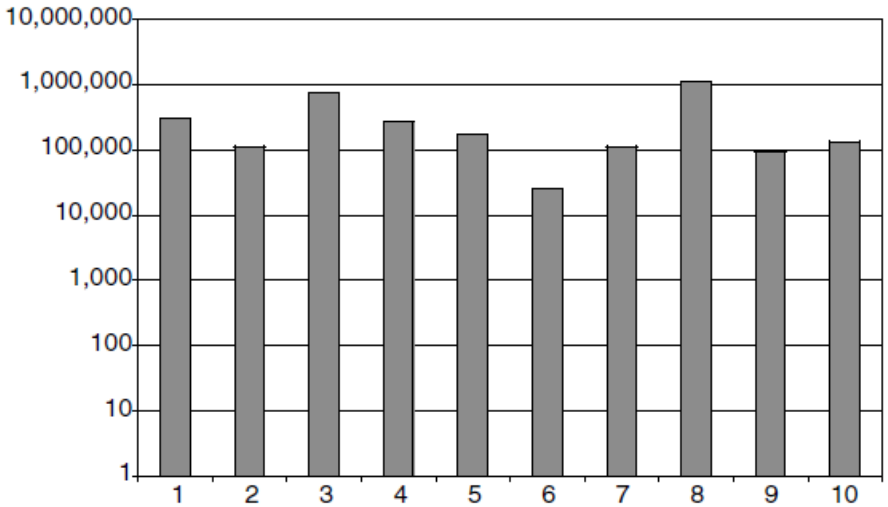

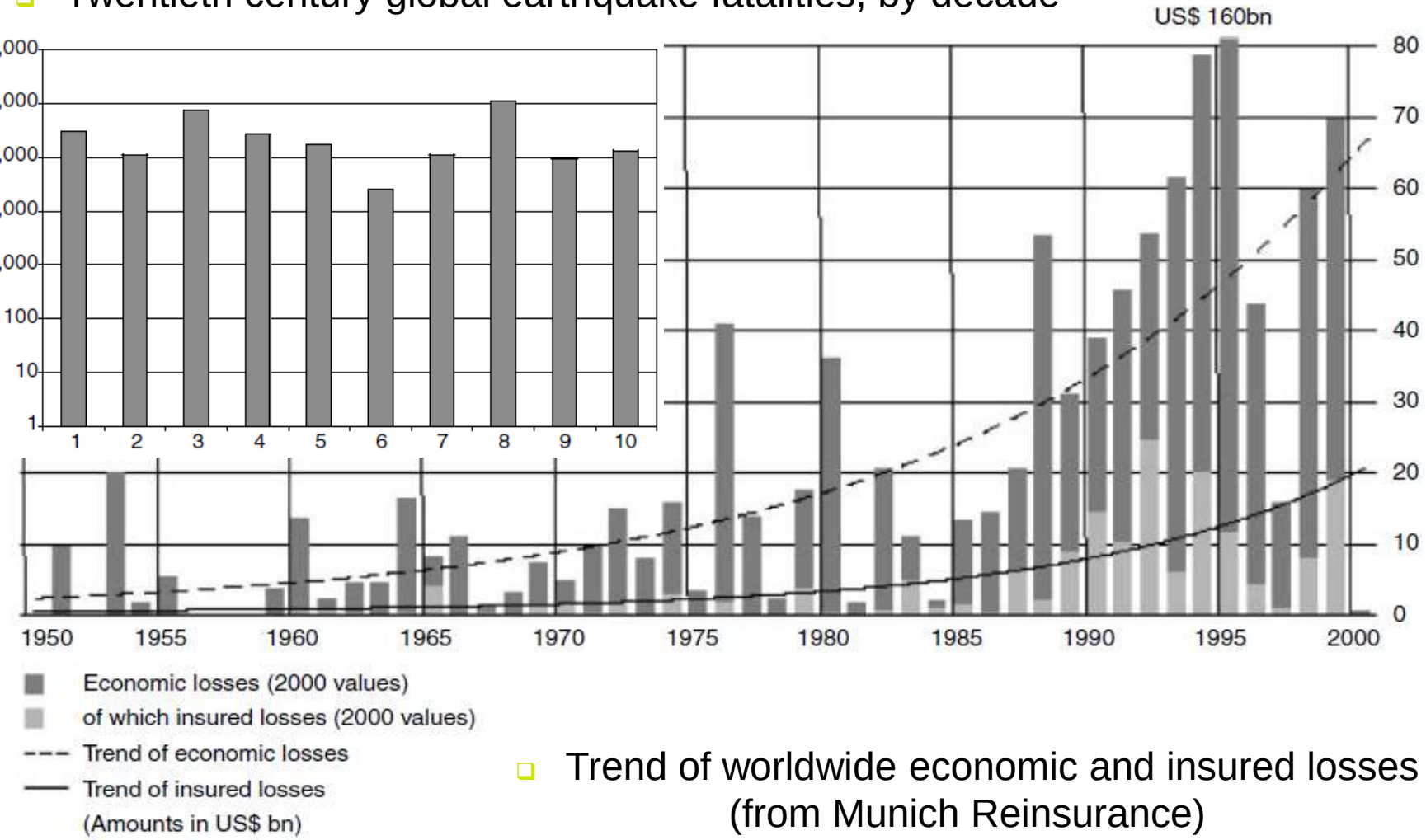

- Trend of worldwide economic and insured losses (from Munich Reinsurance)

Development of seismic design

- **1920's & 1930's several major earthquakes occurred**
  - Japan: 1925 Kanto earthquake
  - USA: 1933 Long Beach earthquake
  - New Zealand: 1932 Napier earthquake

structures designed to lateral wind loads performed better

- Structures designed for lateral inertia forces
- 10% of building's weight uniformly distributed

Development of seismic design

- **1940's & 1950's**
  - Significance of structural dynamic characteristics
- **1960's**
  - Period-dependent design lateral force levels
  - Concept of **DUCTILITY**
- **1970's & 1980's**
  - **CAPACITY DESIGN**
  - Displacement-based design

Development of seismic design

- **Common seismic design procedures:**
  - Equivalent lateral forces (ELF)
  - **Modal spectral analysis**

$$F_b = \gamma S_d(T_1) m \lambda$$

$$F_i = F_b \frac{m_i z_i}{\sum_{i=1}^{n} m_i z_i}$$

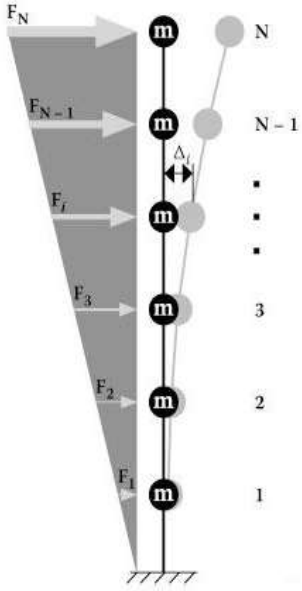

- ELF

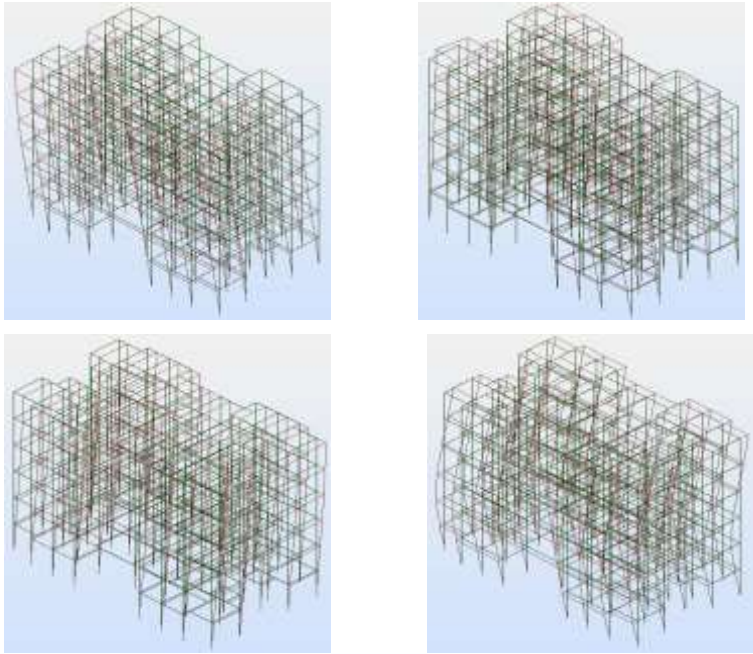

- Modal analysis

Seismic map of Europe

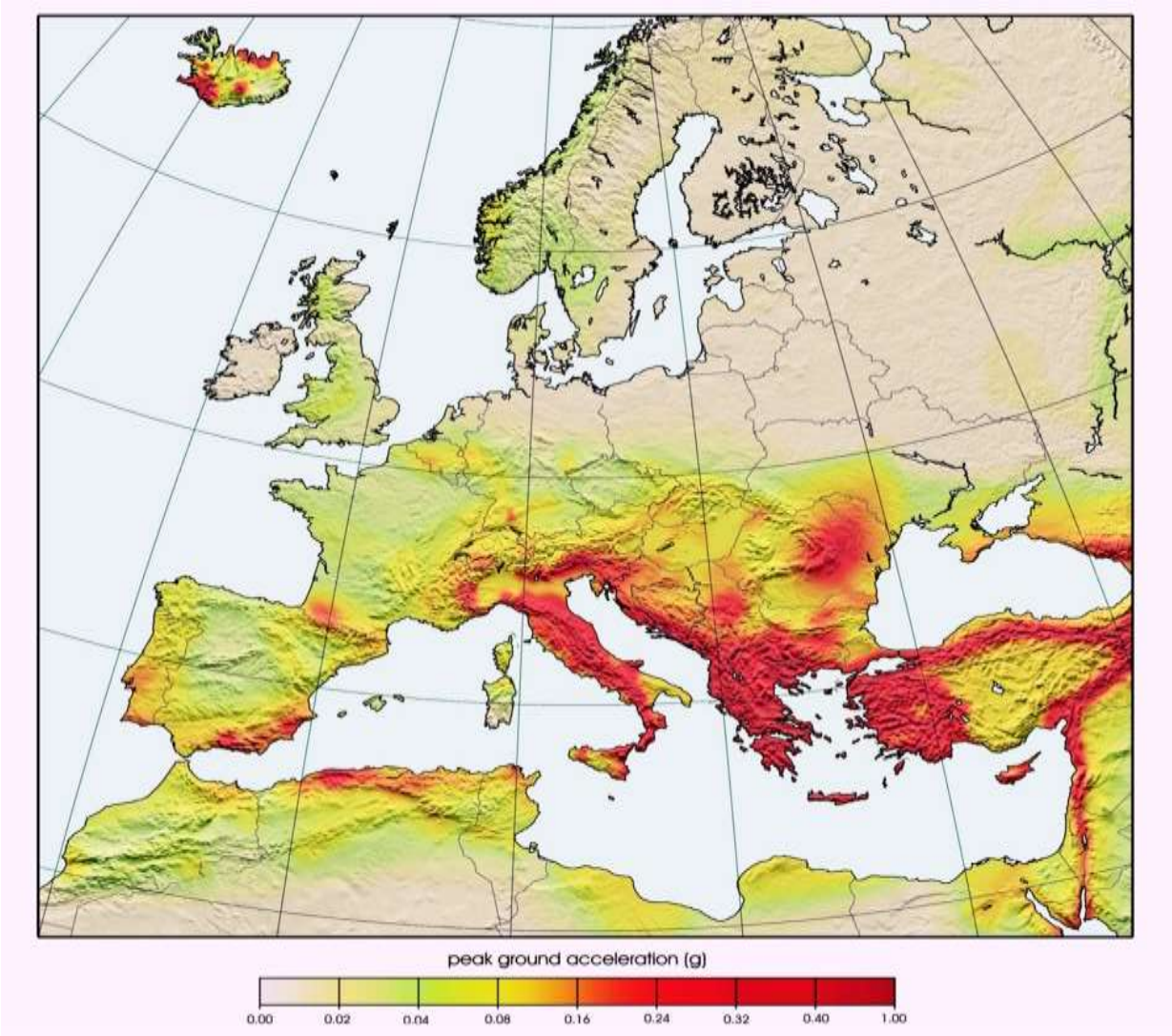

Seismic map of Europe

- **Romania**
  - Constant increase of seismic demand
  - Target reference return period: 225 years → 475 years

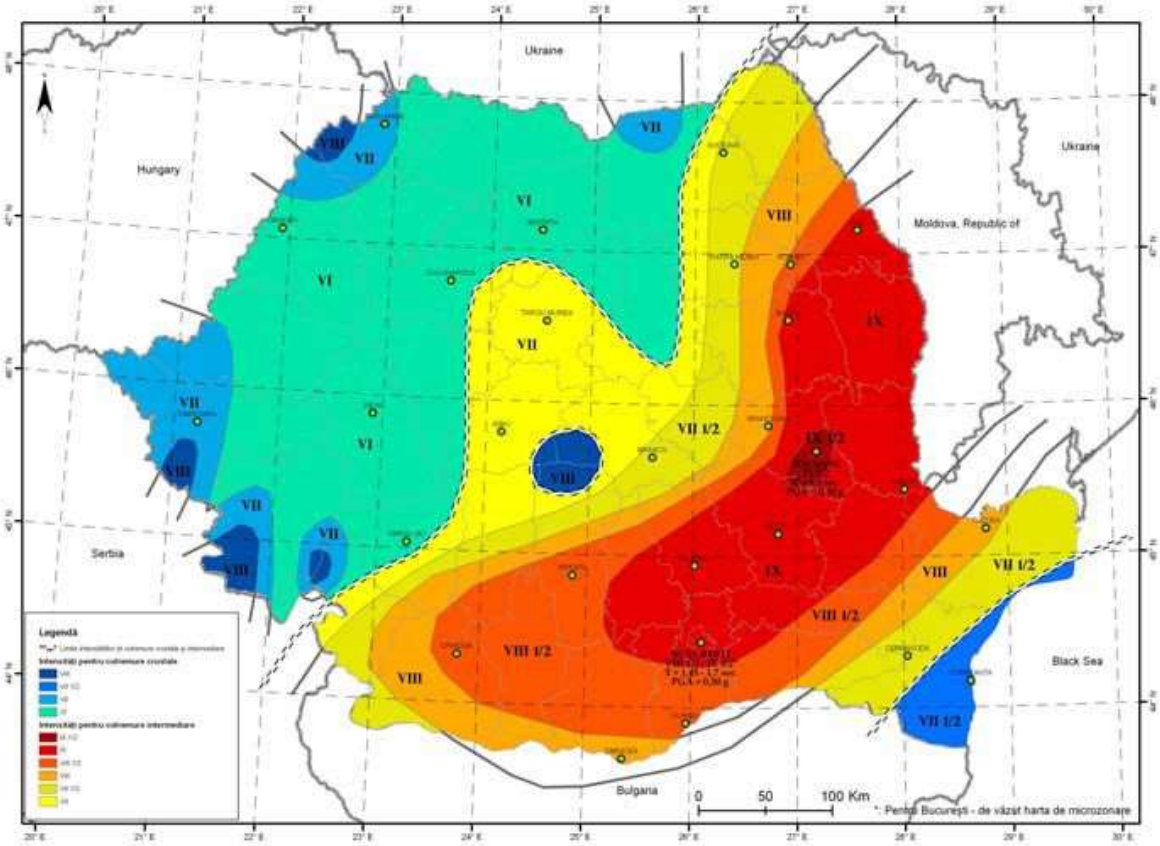

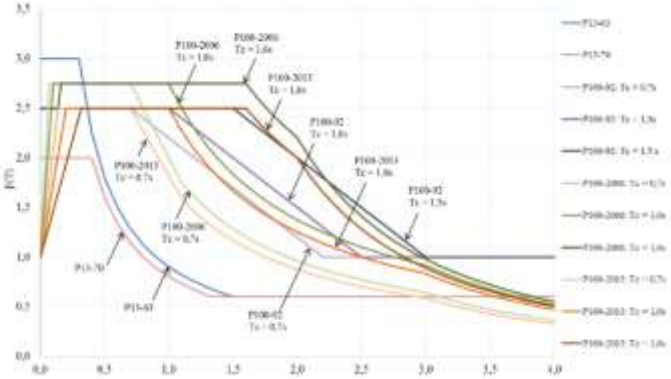

- Evolution of spectral shape

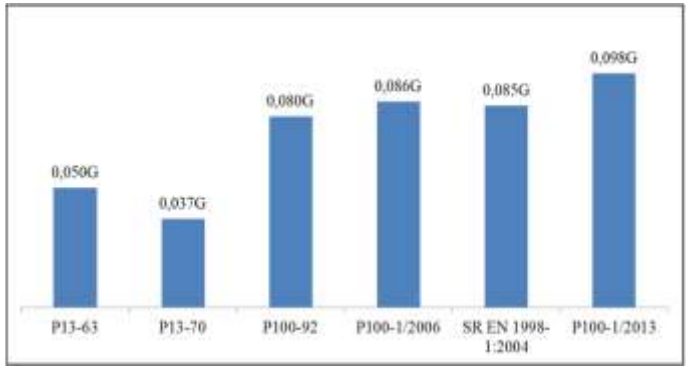

- Evolution of the design base shear for a 13 story RC frame building

Seismic map of Europe

- **Norway**
  - 2004: new series of standards
  - Introduction of seismic design provisions
  - National Annex to EC8
  - Common approach: ductility class low

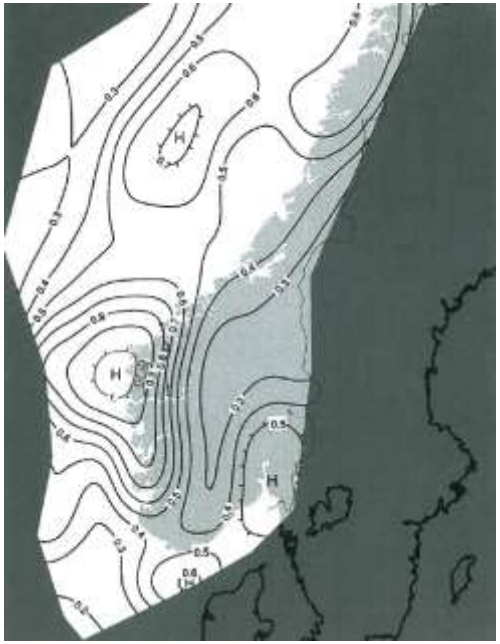

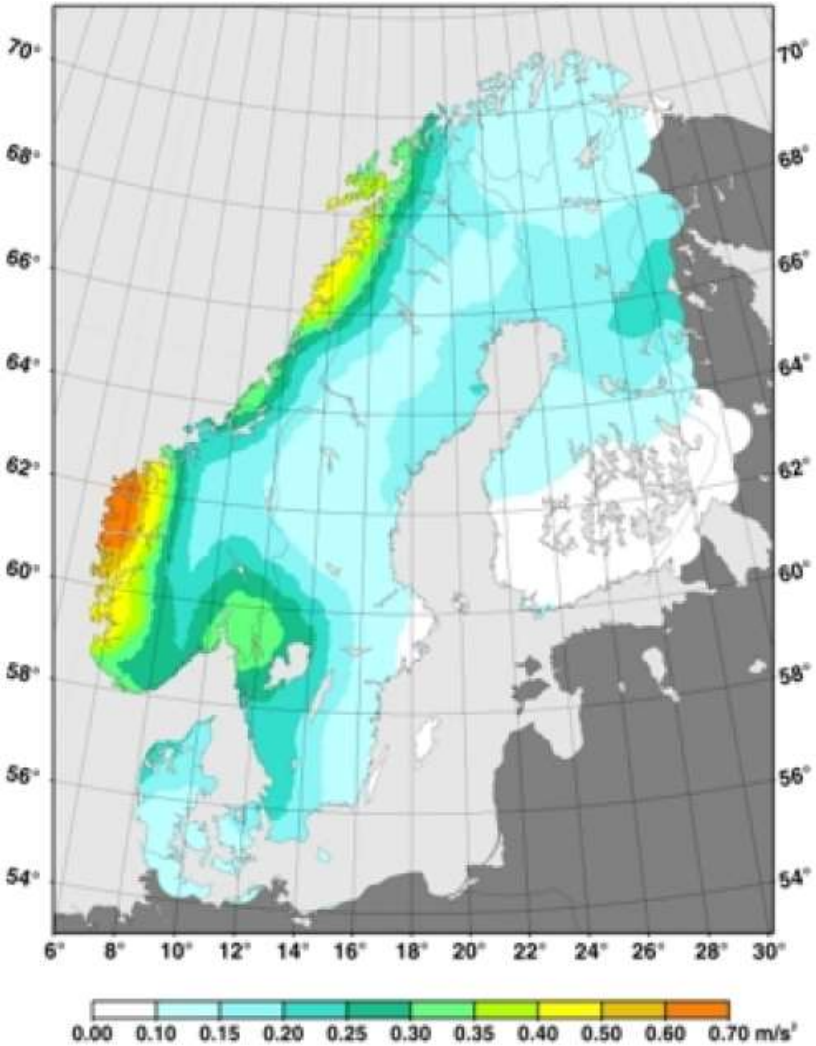

Seismic map of Europe

- **The Netherlands**
  - Globally - non-seismic area
  - Groningen area: shallow earthquakes caused by gas drilling
  - 2014 draft version of the seismic design standard

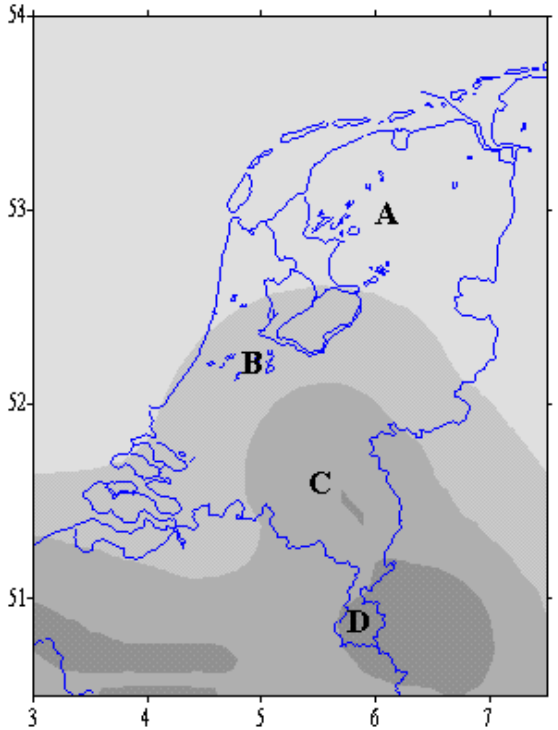

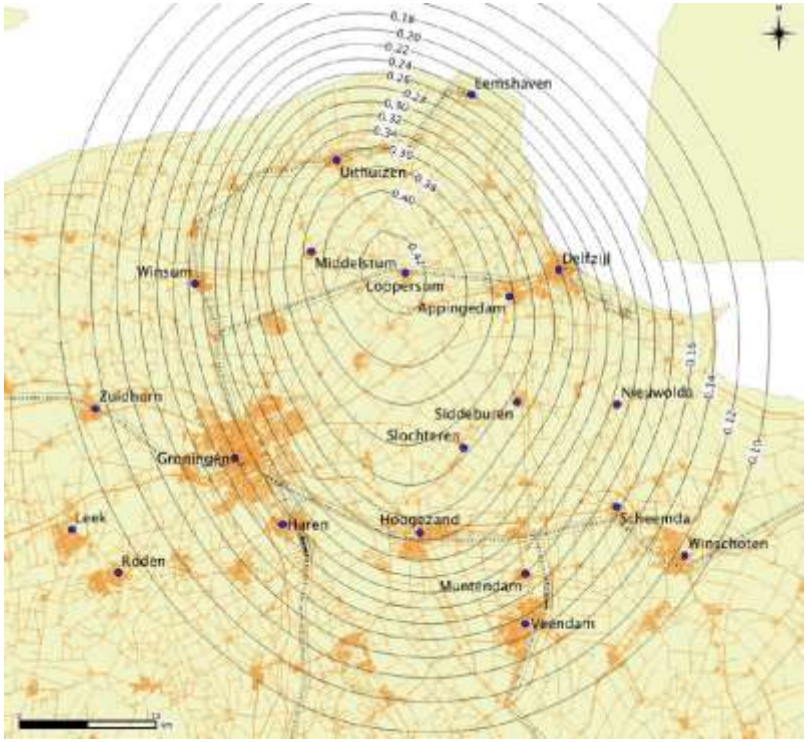

Seismic load

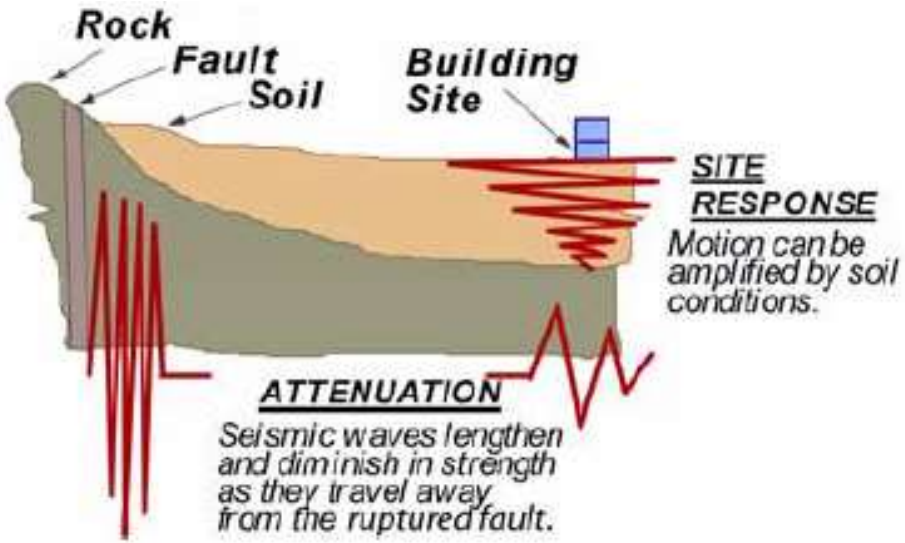

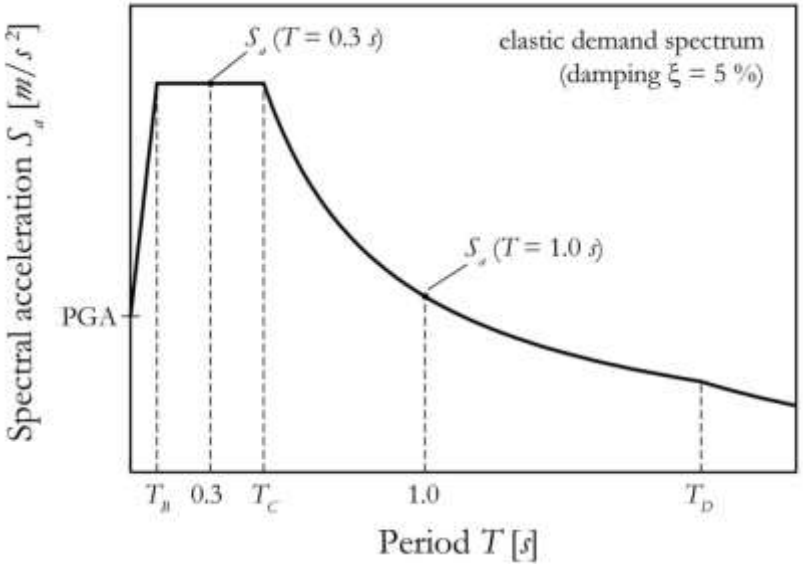

Seismic load

- **EC8 seismic response spectra**
  - Horizontal spectra
    - Seismic design → $a_g S \geq 0.05g$
    - Type 1
    - Type 2
    - Elastic spectrum → q → design spectrum
  - Vertical spectra
    - Seismic design → $a_{vg} \geq 0.25$ g
    - Elastic spectrum → q<1.5 (overstrength)

Spectrum	a_{vg}/a_g	T_B(s)	T_C(s)	T_D(s)
Type 1	0.90	0.05	0.15	1.0
Type 2	0.45	0.05	0.15	1.0

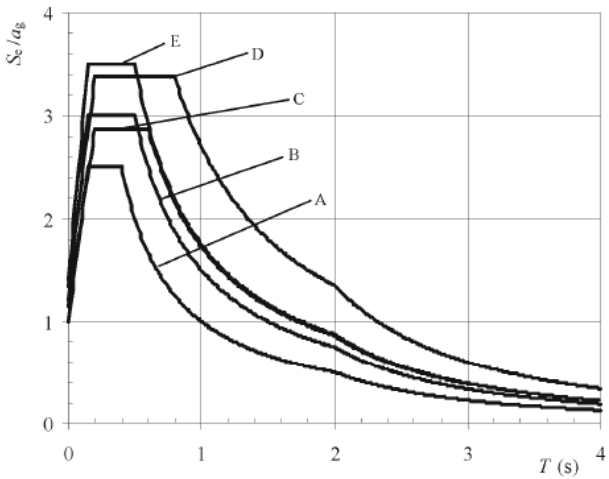

- Type 1 elastic response spectra

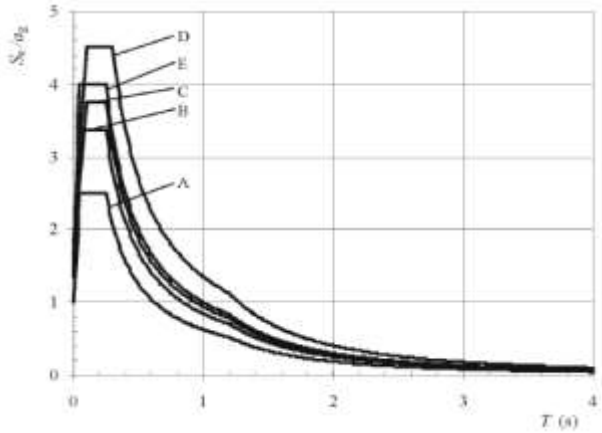

- Type 2 elastic response spectra

Earthquake resistant buildings

- **Conceptual design – EC8**
  - Structural simplicity
  - Uniformity
  - Symmetry
  - Redundancy
  - Bi-directional resistance & stiffness
  - Torsional stiffness
  - **Diaphragmatic behaviour at storey level**
  - Adequate foundation

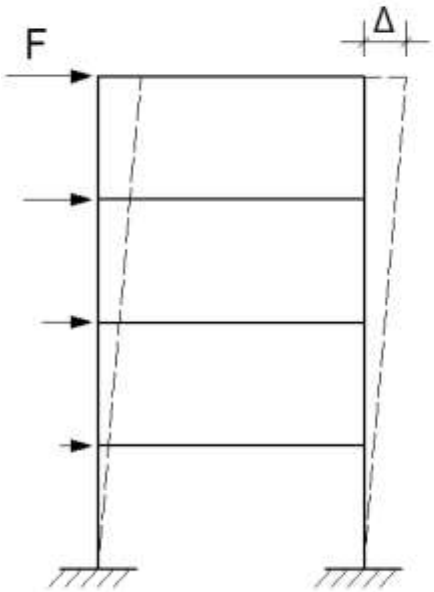

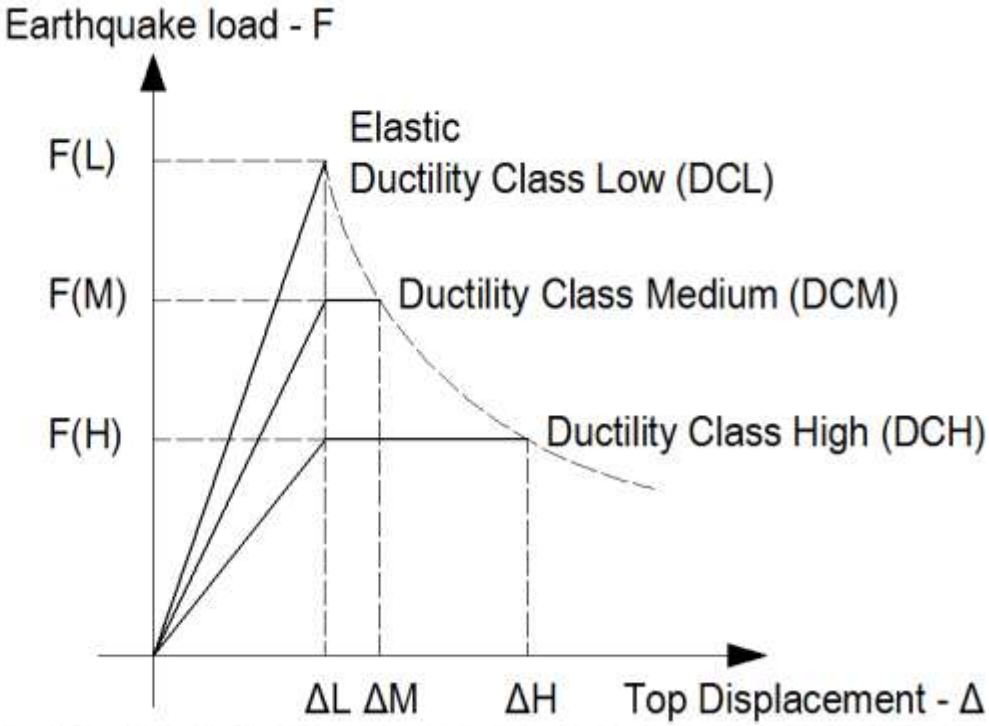

Earthquake resistant buildings - ductility

a) Hysteretic force-deformation behavior from tests

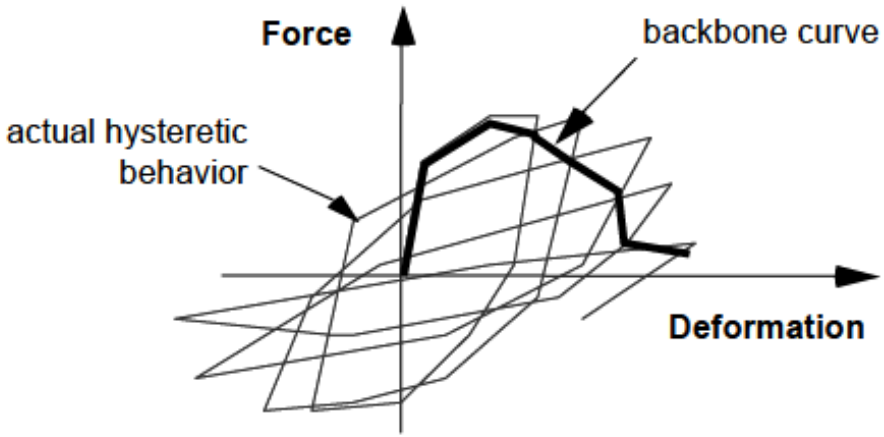

b) Backbone representation of hysteretic behavior

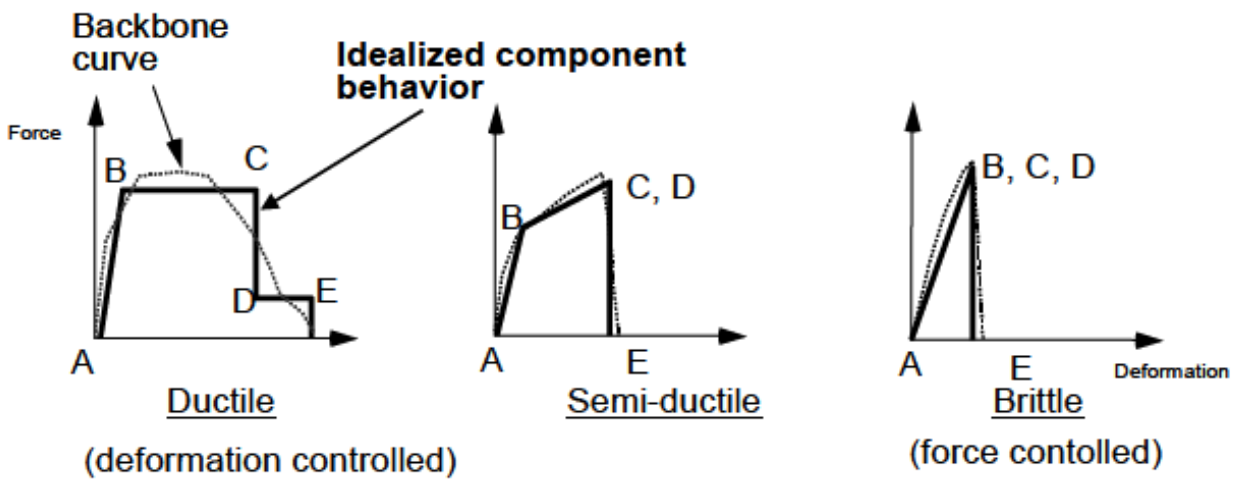

Earthquake resistant buildings

- **Conceptual design – EC8**
  - Basic value of the behaviour factor, q

Structural type	DCM	DCH
Frame, dual, coupled wall systems	$3.0\alpha_u/\alpha_1$	$4.5\alpha_u/\alpha_1$
Uncoupled wall systems	3.0	$4.0\alpha_u/\alpha_1$
Torsionally flexible systems	2.0	3.0
Inverted pendulum systems	1.5	2.0

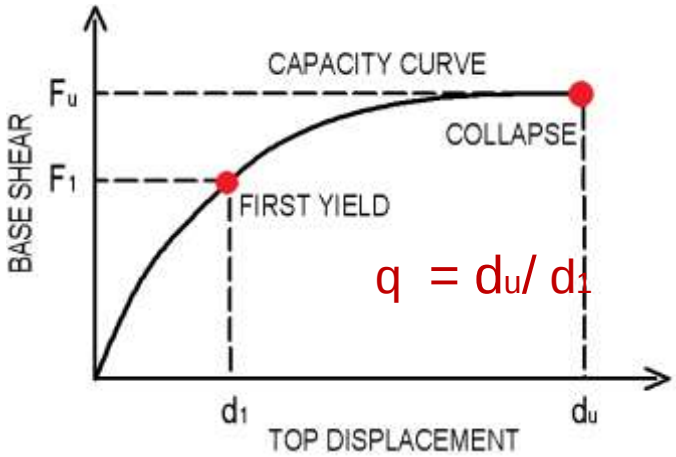

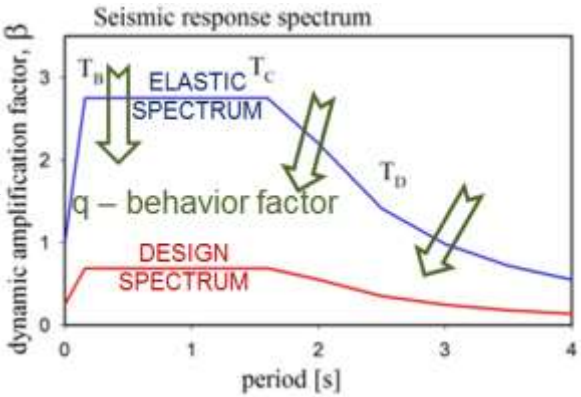

Earthquake resistant buildings

- **Capacity design method**
  - Designated elements suitably designed for energy dissipation
  - All other structural elements provided with sufficient strength

Preferred ductile mode of failure

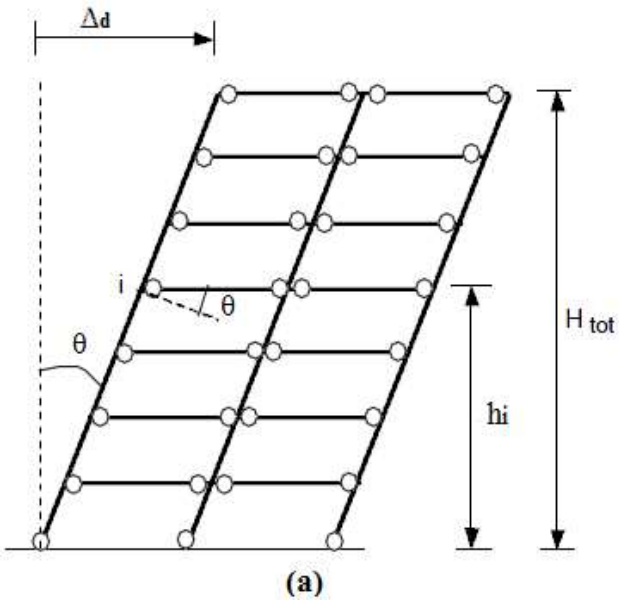

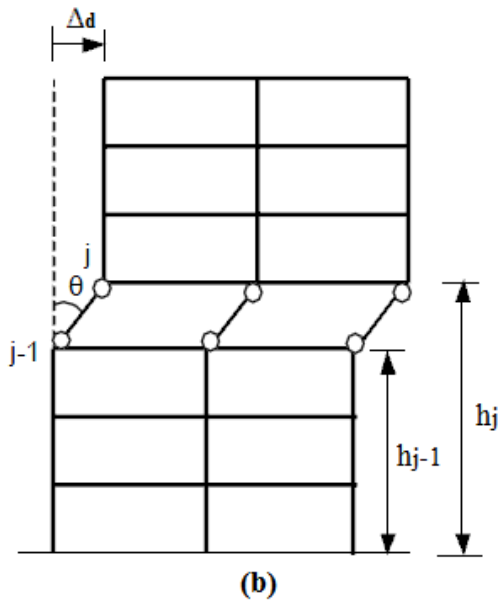

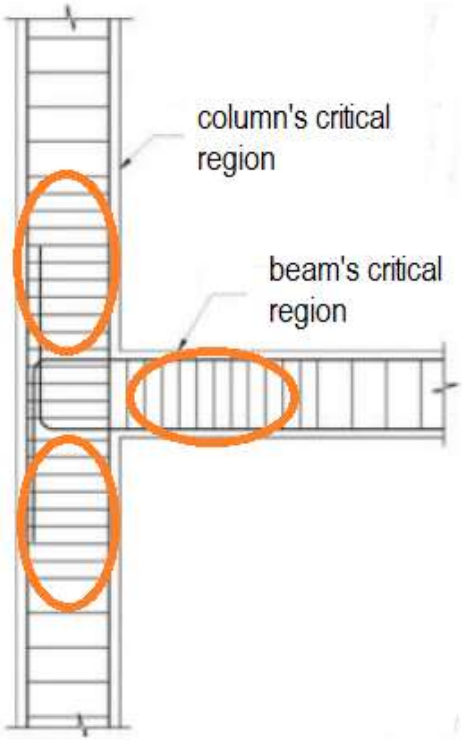

- Ductile mode of failure
- Story mechanism – early collapse

Earthquake resistant buildings

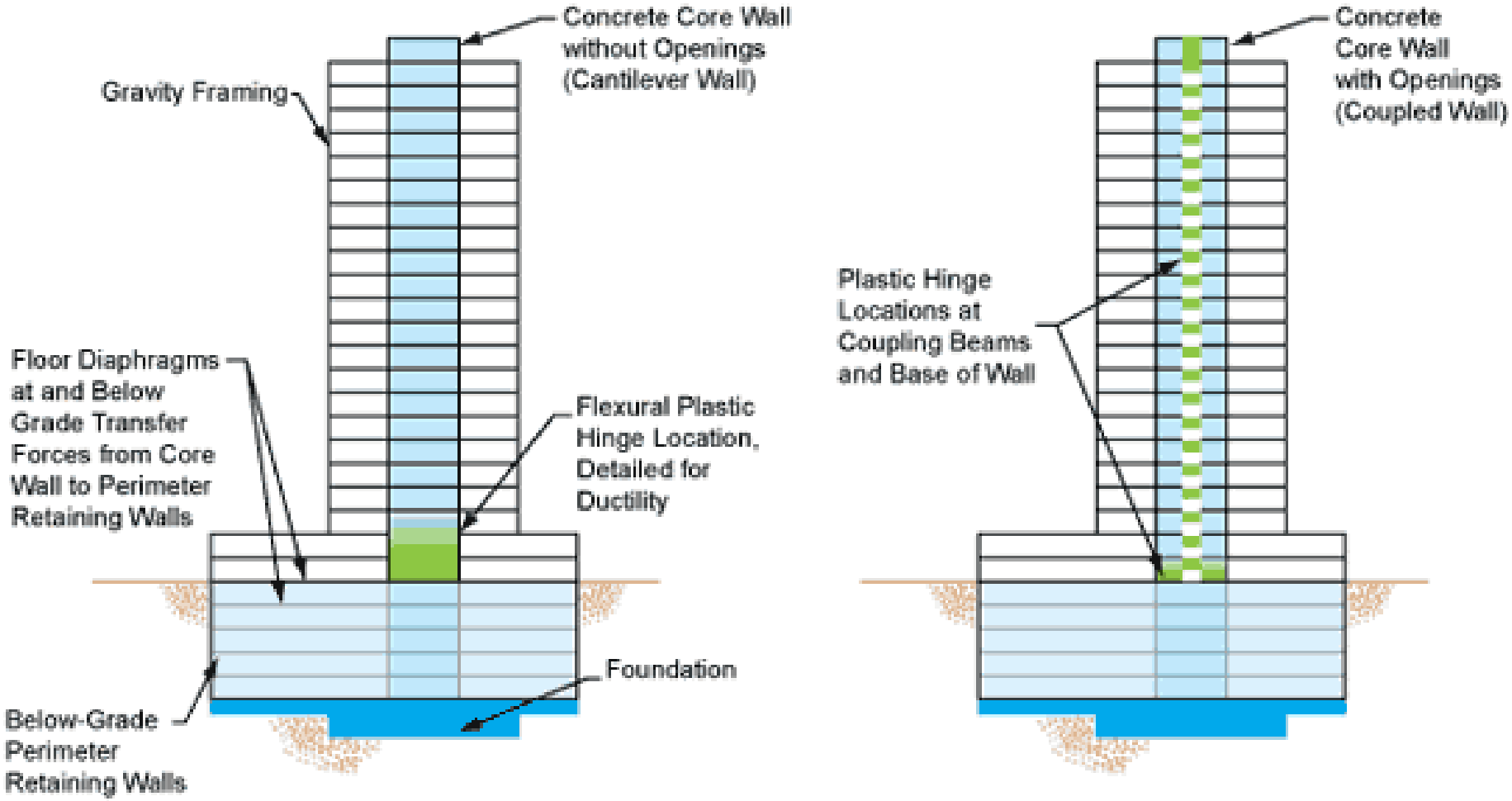

Earthquake resistant buildings

- Failure of confinement in columns – 1985 Mexico earthquake

- Failure due to discontinuity of vertical resisting elements – 1972 San Fernando earthquake

Earthquake resistant buildings

- **Regardless of the ductility class of the structure**
  - Foundations
  - **Floors**
  - Connections

⇒ **ELASTIC RANGE**

DIAPHRAGMS

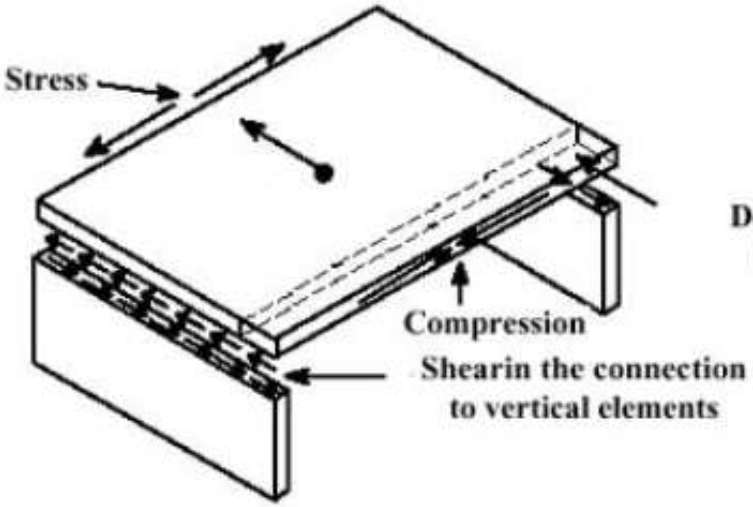

Concentration of stress in rigid diaphragm

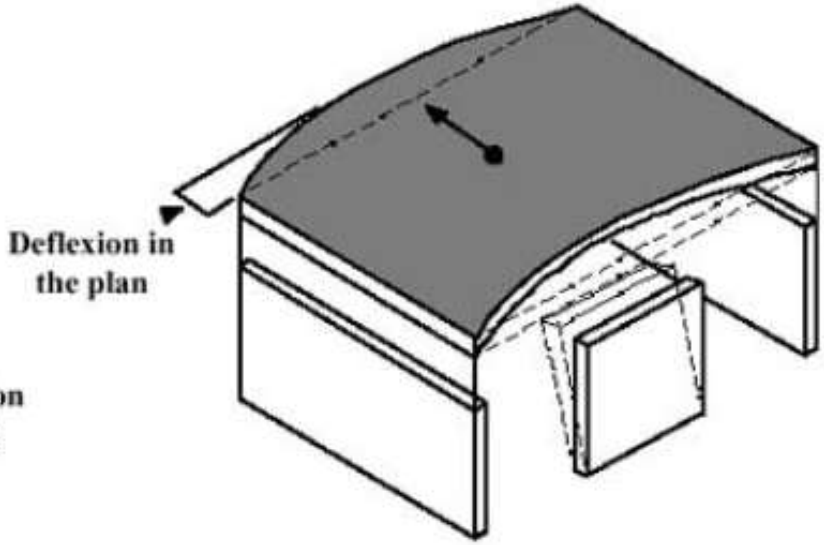

Deflection of stress in flexible diaphragm

Diaphragms - Eurocode8

- **Solid reinforced concrete slab**
  - Minimum thickness ≥ 70 mm
  - Reinforced in both horizontal directions
  - Explicit verifications required only in DCH
- **Cast-in-place topping on a precast floor**
  - Provides alone the required diaphragm stiffness and resistance
  - Composite section

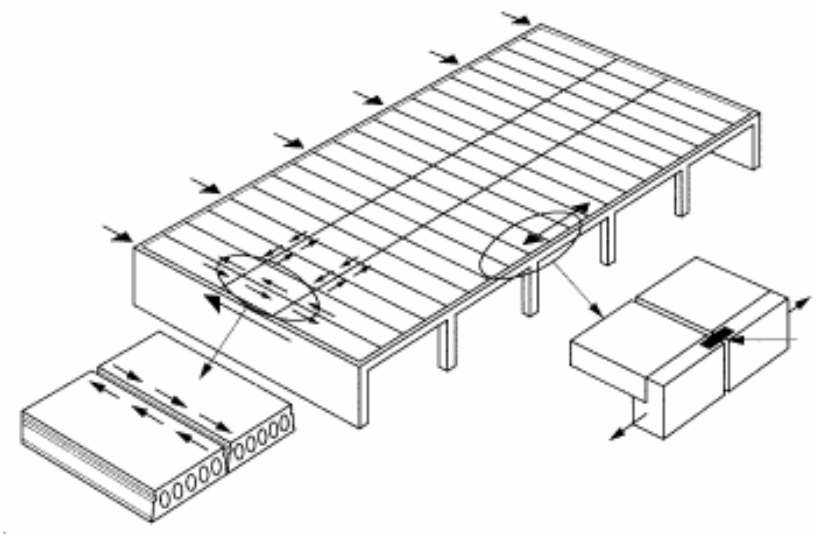

Diaphragms - Eurocode8

- **Precast slabs**
  - Appropriate topping → drastically improves the rigidity of the diaphragm
  - Thickness of topping ≥ 40 mm if span ≤ 8 m
  - Thickness of topping ≥ 50 mm if span > 8 m
  - Mesh reinforcement connected to vertical resisting elements
  - Ties →system of reinforcement
  - Friction forces neglected

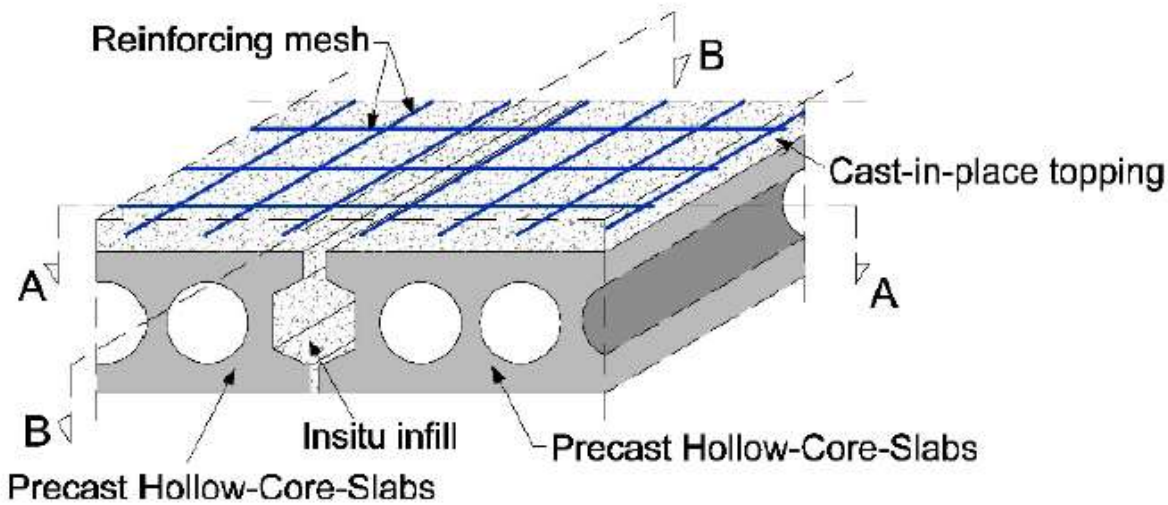

Diaphragms – USA (ACI)

- **General provisions**
  - Prevention of boundary reinforcement (ties) from buckling
    - Increased spacing in between bars
    - Confinement with transverse reinforcement

- **Precast slabs with cast-in-place topping**
  - Composite section
  - Independent elements

  ⇒ <u>topping resist the entirety of the in-plane earthquake shear forces</u>

  - Topping slabs acting compositely – thickness ≥ 50mm
  - Non-composite topping – thickness ≥ 65mm

Diaphragm – New Zealand (NZS)

- **General provisions**
  - Designed to remain elastic
  - Designed to <u>forces associated with overstrength development</u>

- **Precast slabs with cast-in-place topping**
  - It is recommended to rely on reinforced topping of at least 50 mm
  - Elements with camber
  - Minimum cover at lapped splices
  - <u>Mesh → rebars</u>

⇒ thickness ≥ 65mm

Design loads for diaphragms

- **EC8**
  - Shear forces → overdesign factor γ_{Rd}=1.1 - 1.3

- **ASCE**
  - Collectors are designed to remain elastic (overstrength factor Ω_0 = 2 – 3)

$$F_{px} = \frac{\sum_{i=x}^{n} F_i}{\sum_{i=x}^{n} w_i} w_{px}$$

$$0.2 S_{DS} I w_{px} \leq F_{px} \leq 0.4 S_{DS} I w_{px}$$

F_{px} – the diaphragm design force

F_i – the design force applied to Level i

w_i - the weight tributary to Level i

- **NZS**
  - capacity design
  - γ_{Rd} x seismic loads < design loads (F_{Ed})< elastic seismic forces (q=1)

Design of diaphragms

- **Deep beam model**

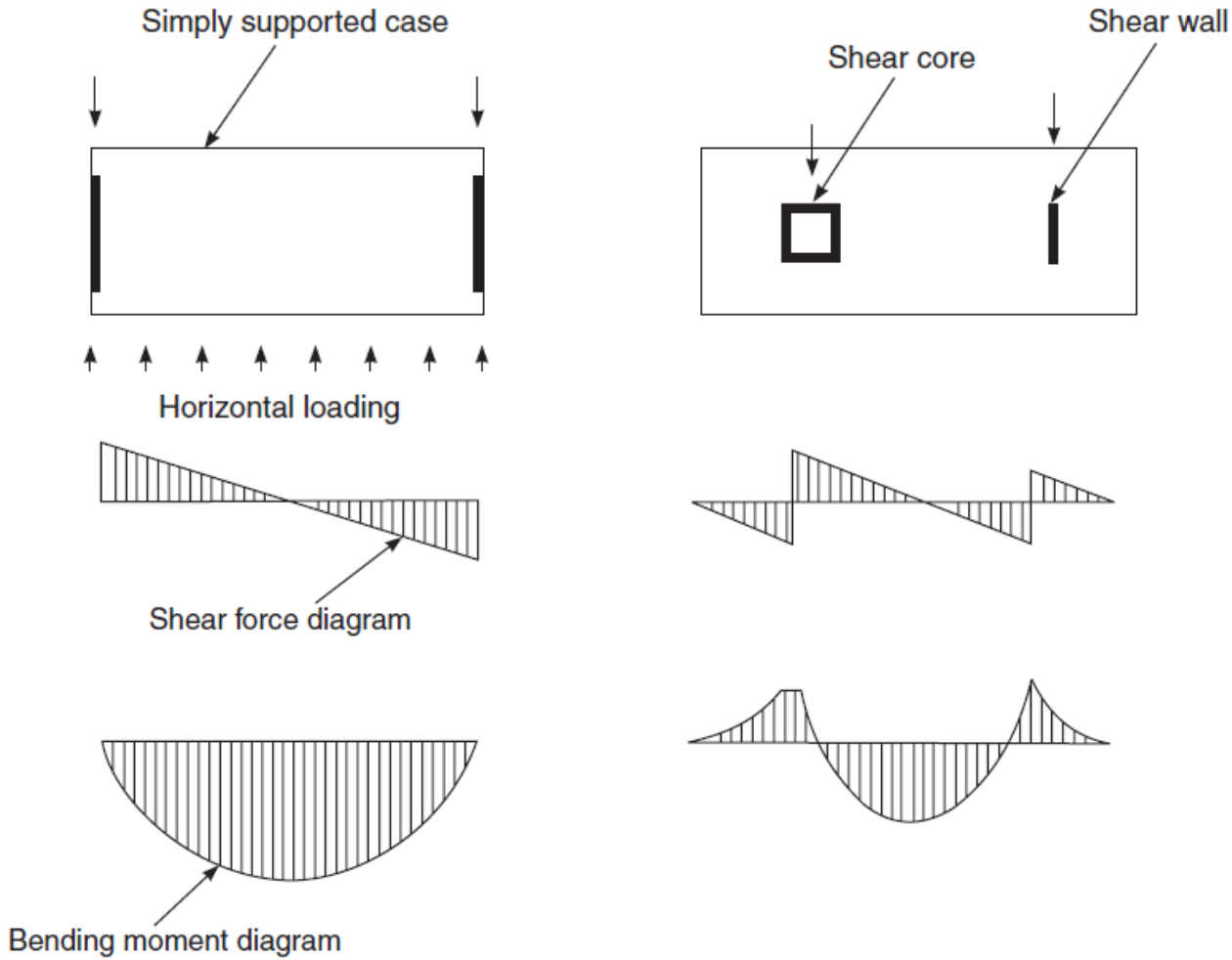

Design of diaphragms

- **Strut and tie model**

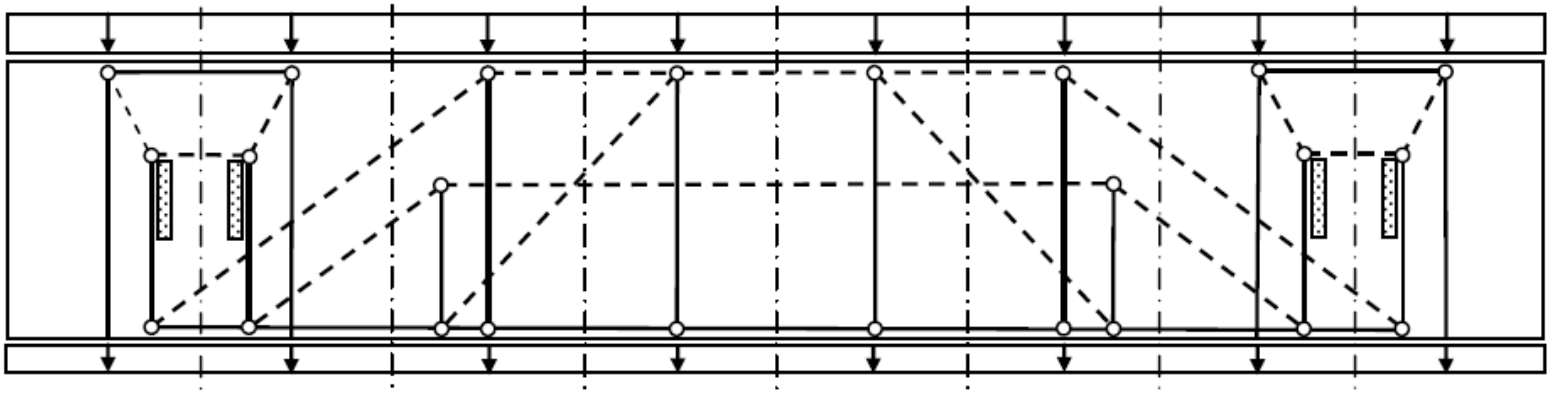

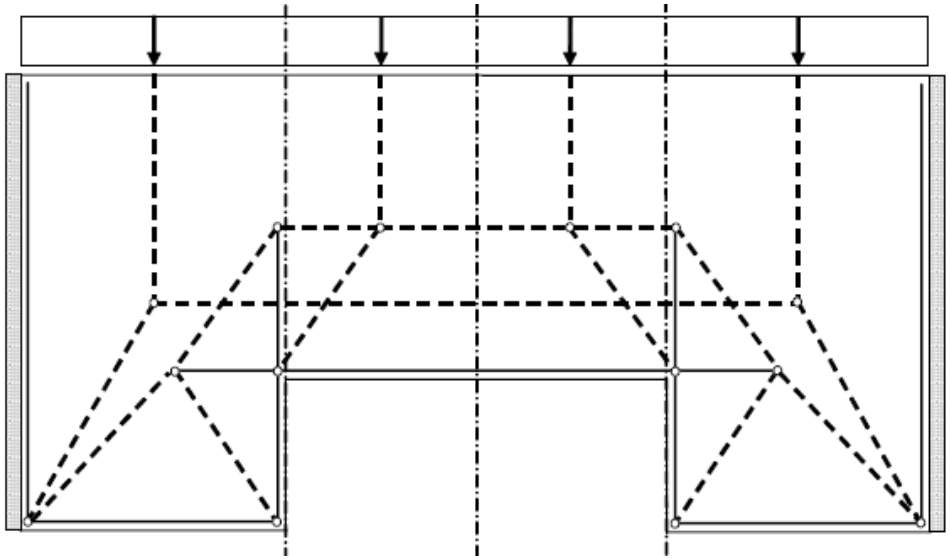

Design of diaphragms

- **3D mathematical model & seismic analysis**

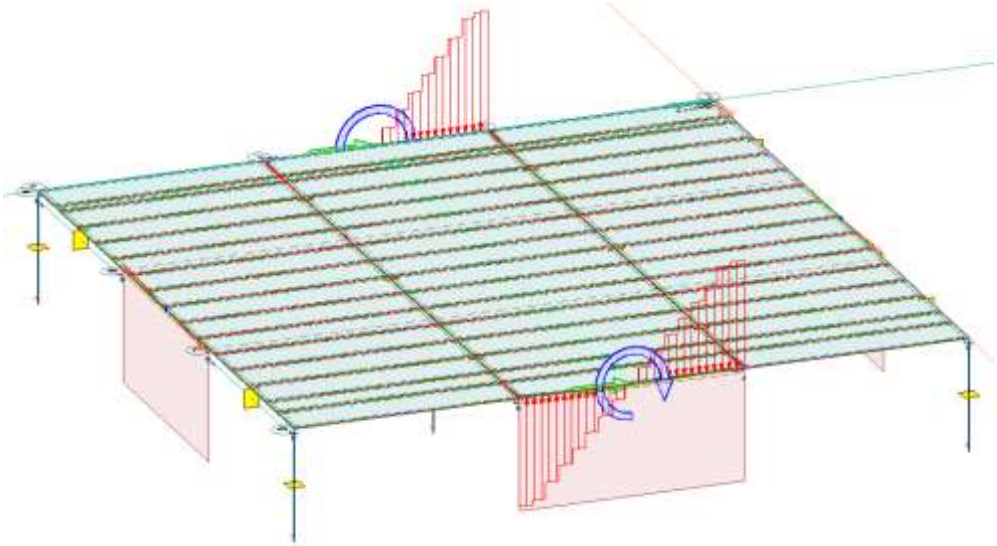

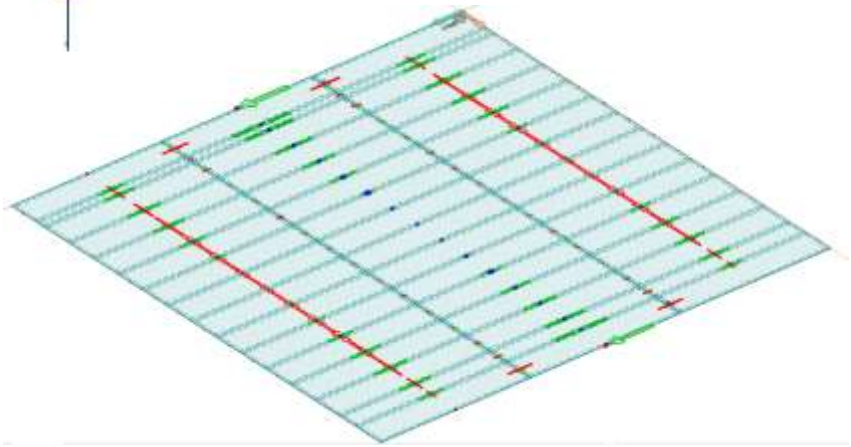

Design of HC diaphragms

- **Diaphragm action with hollow core slabs**

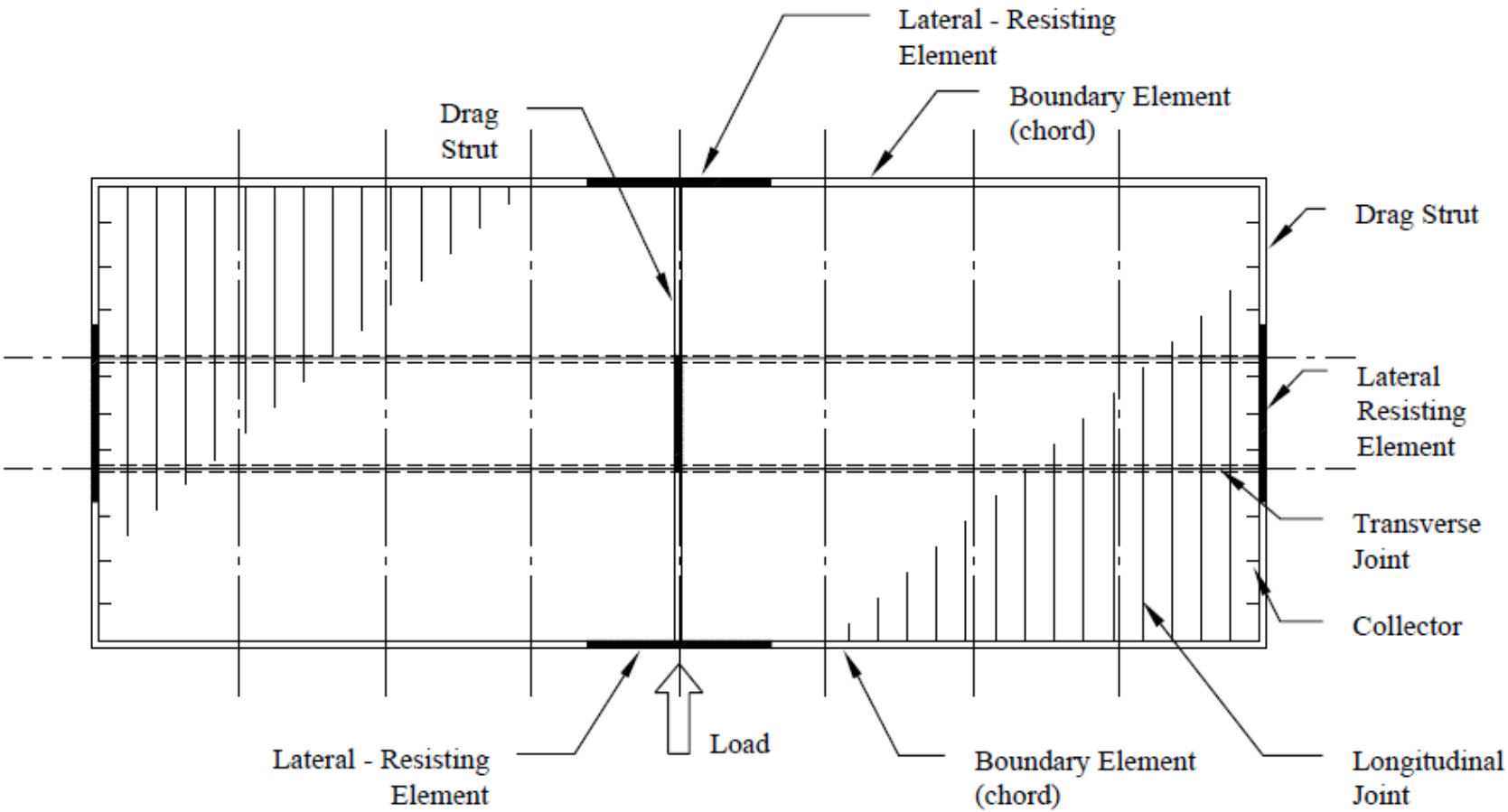

Design of HC diaphragms

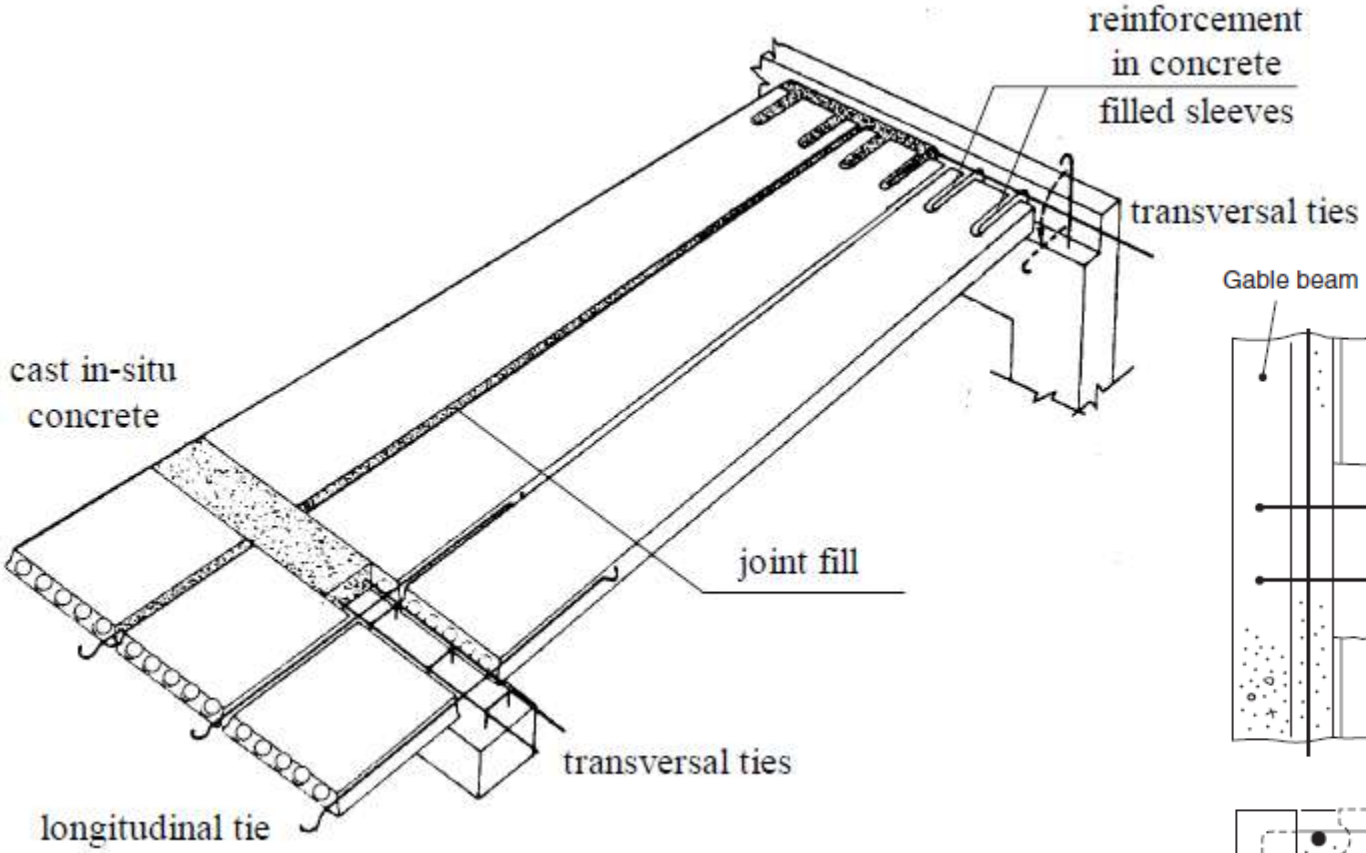

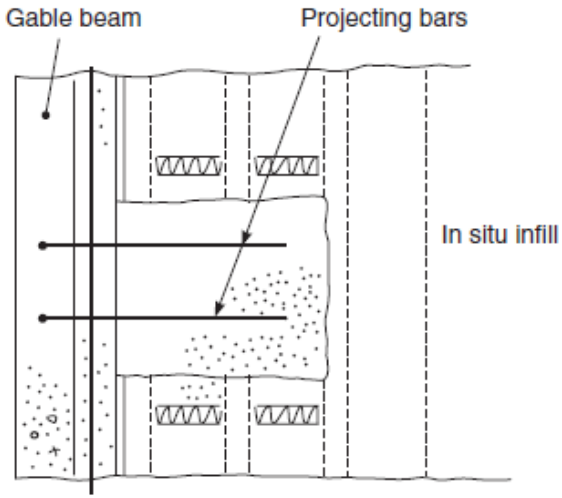

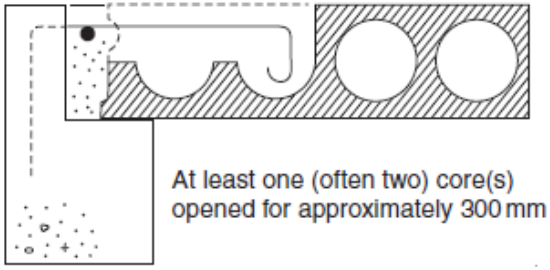

Design of diaphragms – PCI provisions

- **Longitudinal joints**
  - Longitudinal shear transfer capacity of grouted keyways
  - Limited strength for longitudinal shear

$$\phi V_n = \phi(0.08) h_n \ell$$

where

ℓ = length of joint under consideration (in)

h_n = net height of grout key (in)

ϕ = 0.85

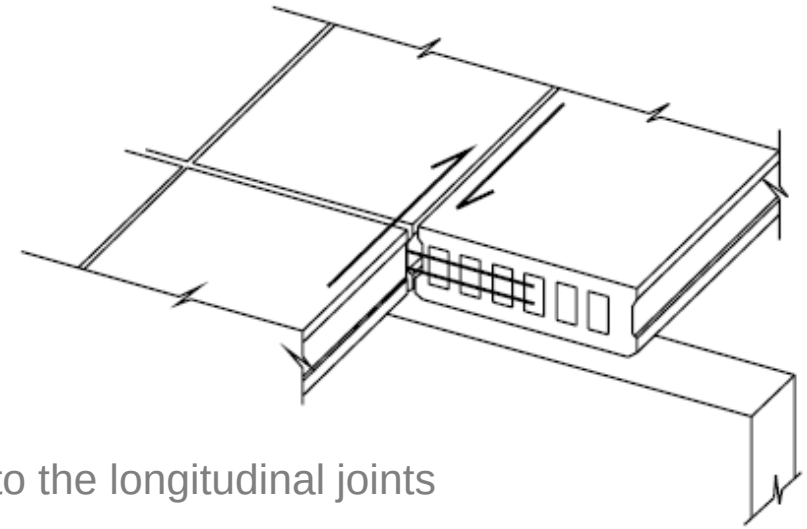

  - Grout strength exceeded
    - Reinforcement placed perpendicular to the longitudinal joints

$$A_{vf} = \frac{V_u}{\phi f_y \mu}$$

where

V_u = factored applied shear

Design of diaphragms – PCI provisions

- **Transversal joints**
  - Shear friction reinforcement for shear in the longitudinal joints
  - Drag strut with axial tension/compression

$$A_s = \frac{T_u}{\phi f_y}$$

  - Chord member where flexural tension is resisted

$$A_s = \frac{M_u}{\phi 0.8 h f_y}$$

where

h = depth of the diaphragm

ϕ = 0.9

When is topping needed?

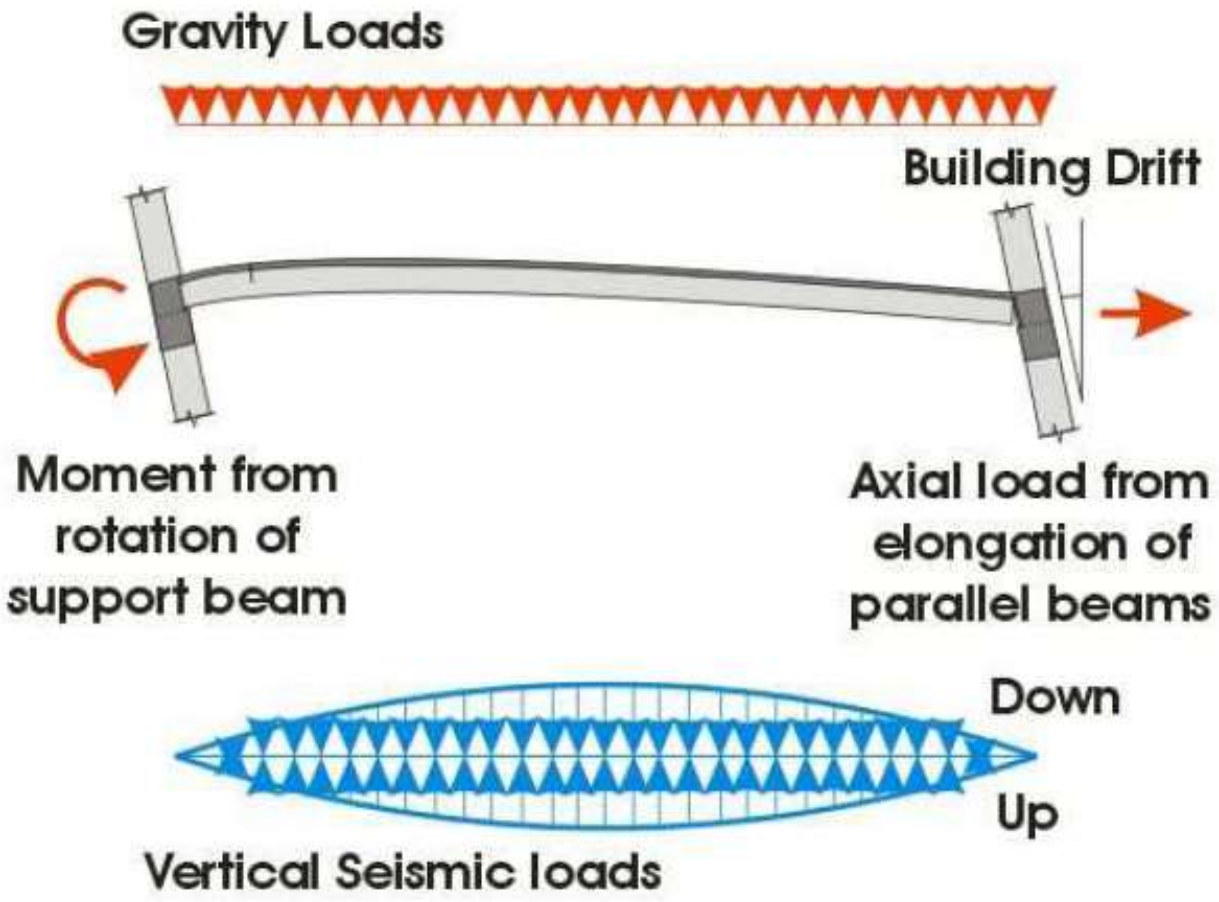

When is topping needed?

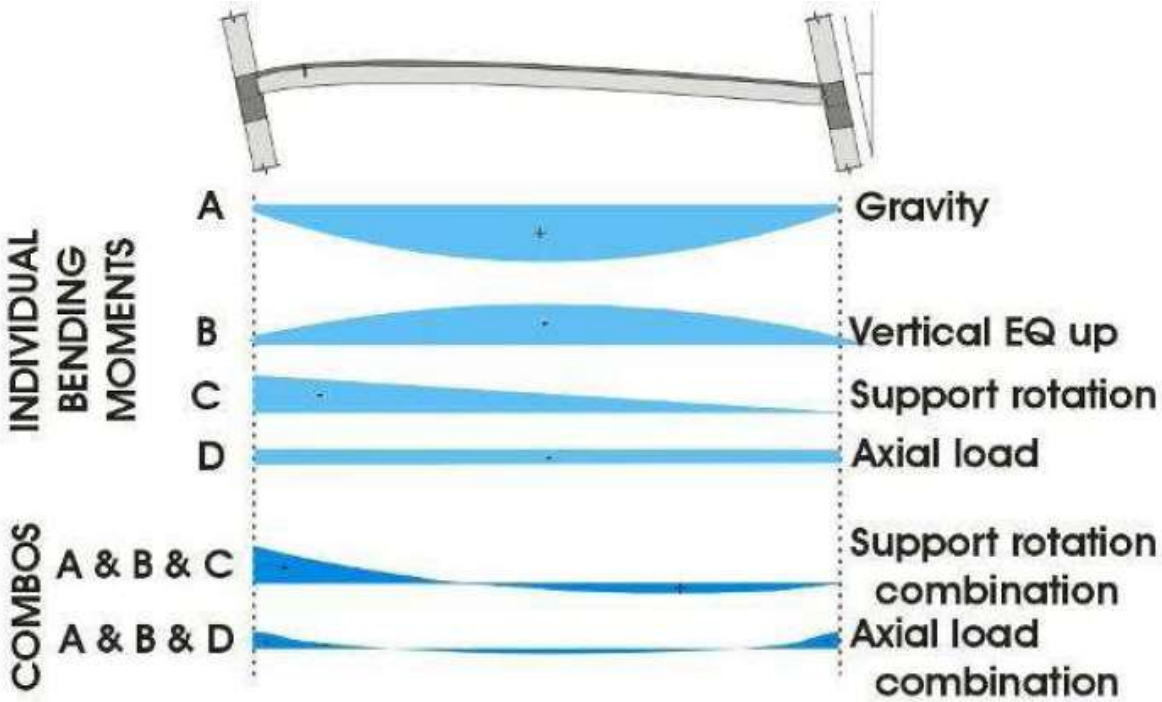

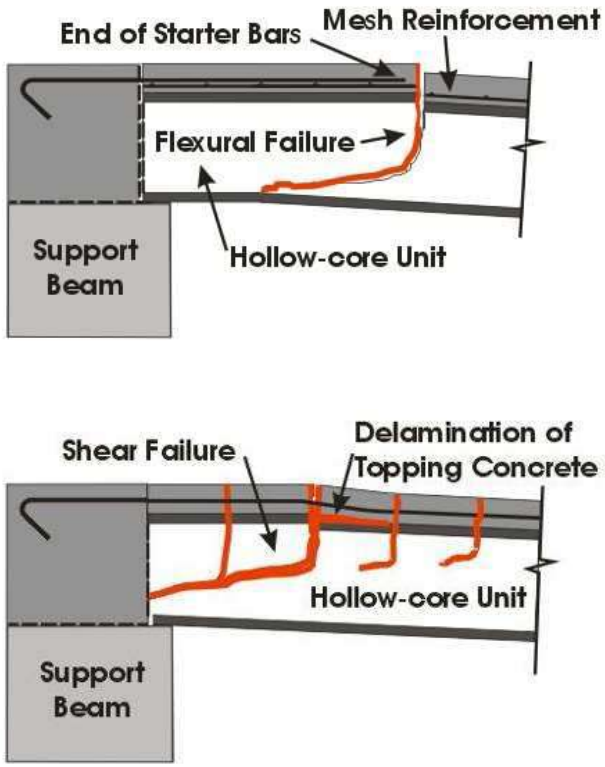

Potential failure modes

- **Interaction of precast HC units with beams (frame systems)**

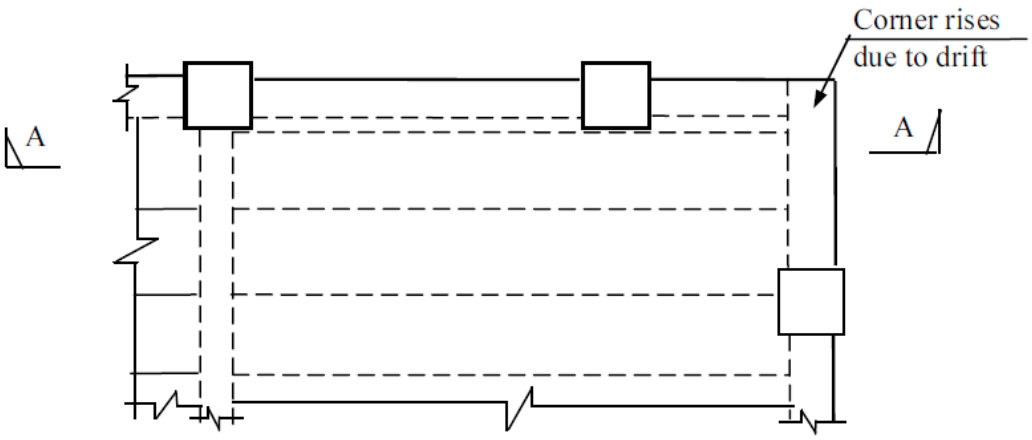

Plan on part of floor

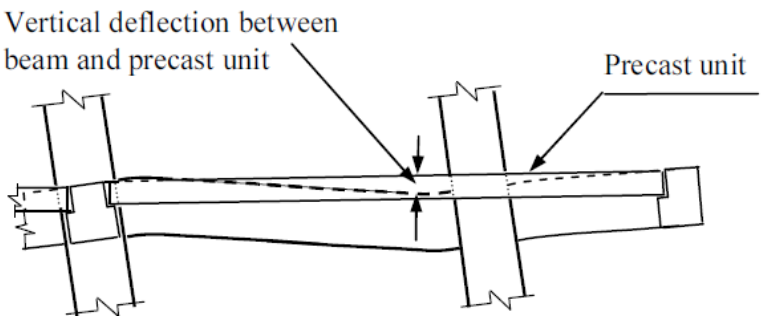

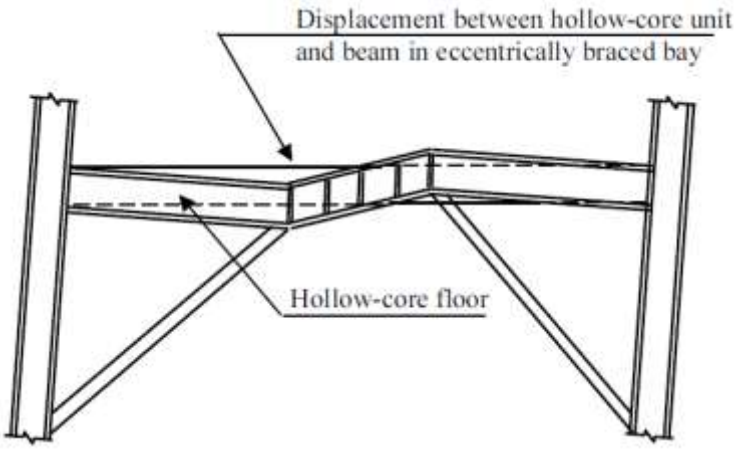

Potential failure modes

- **Interaction of precast HC units with beams (frame systems)**
  - Differential displacement between HC and beam → splitting of the web

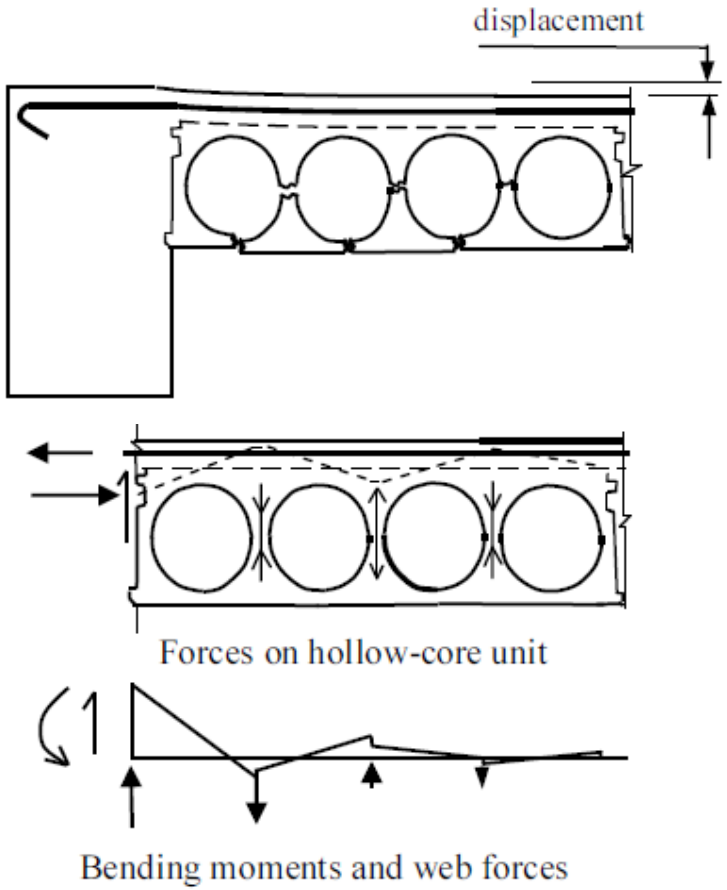

Potential failure modes

- **Interaction of precast units with beams (frame systems)**
  - Beam-slab interaction → up to 2x negative bending capacity

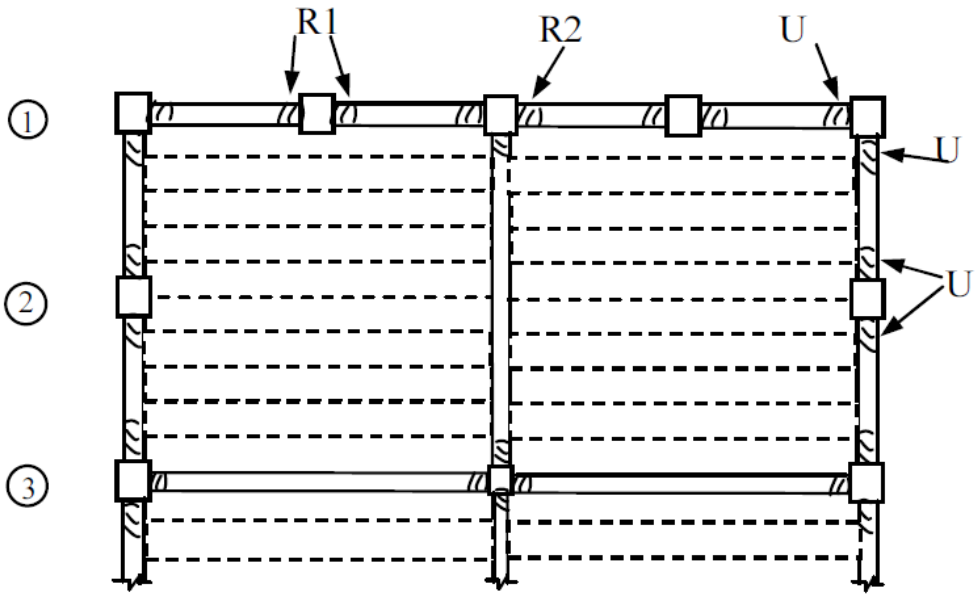

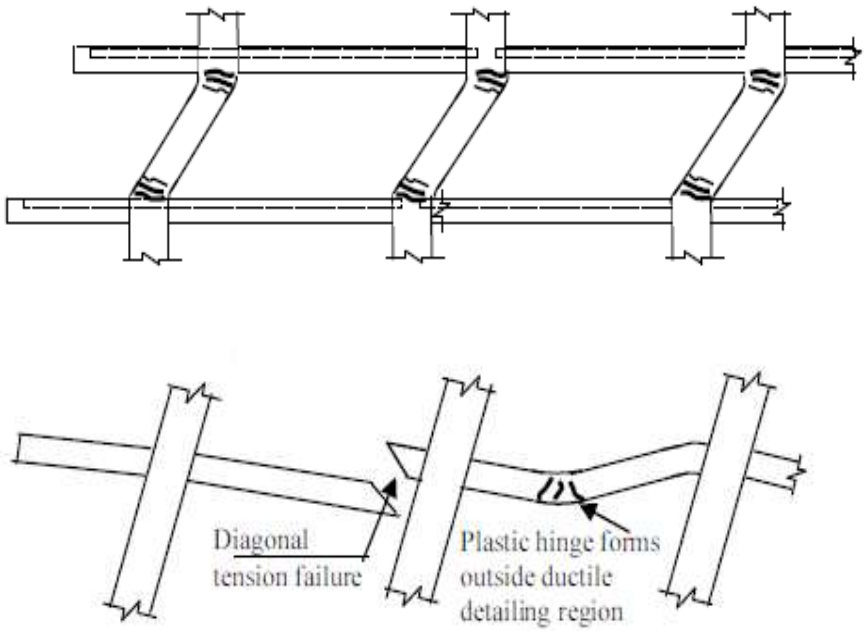

Potential failure modes

- **Interaction of precast units with beams (frame systems)**
  - Solution → flexible “linking” slab – allow differential movement

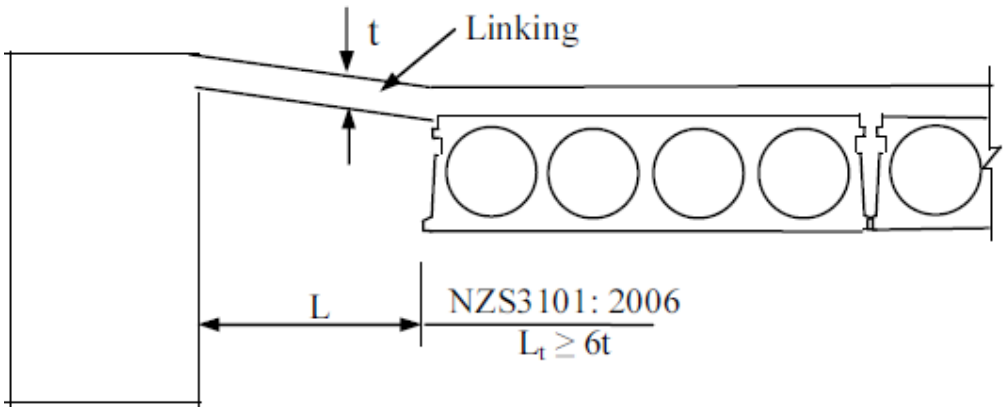

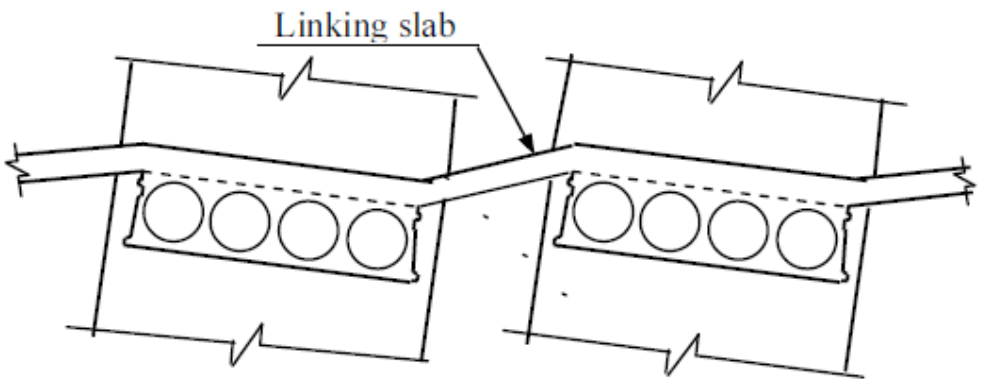

Potential failure modes

- **Possible loss of support of hollow-core units**
  - Movement of support relative to precast unit
  - Required support length should include elongations

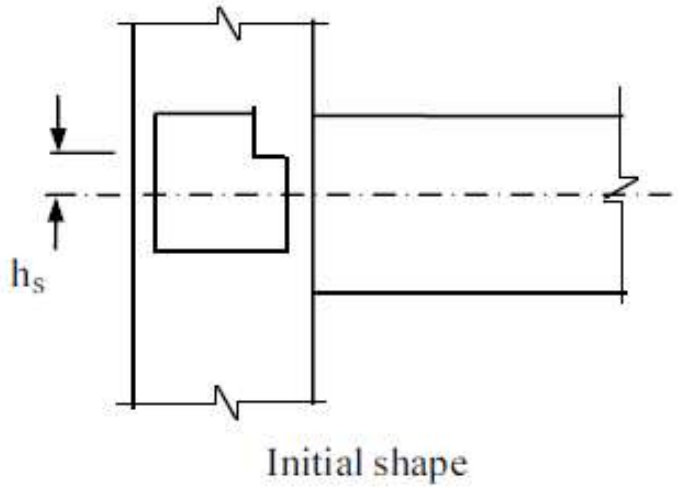

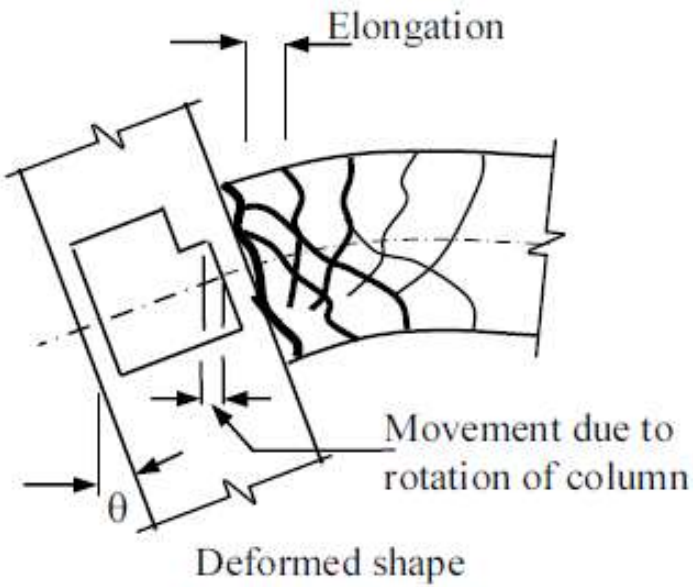

Potential failure modes

- **Negative moment failure near support**
  - Unintended restraining effects
  - Flexural strength – starter bar > flexural strength – mesh

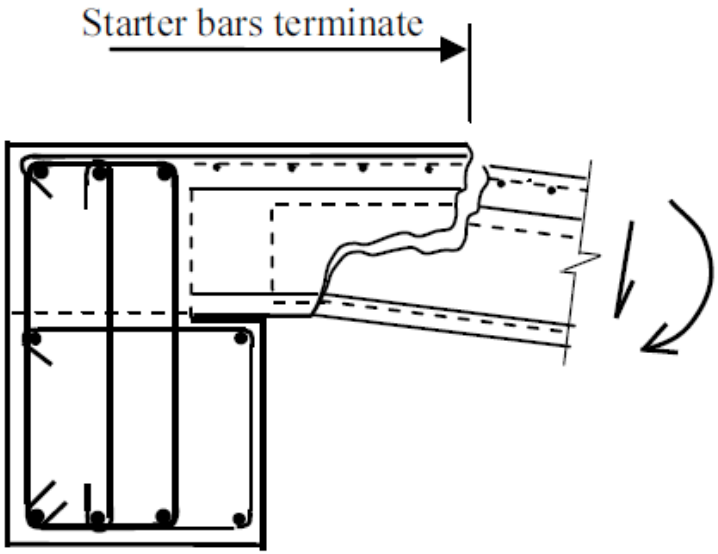

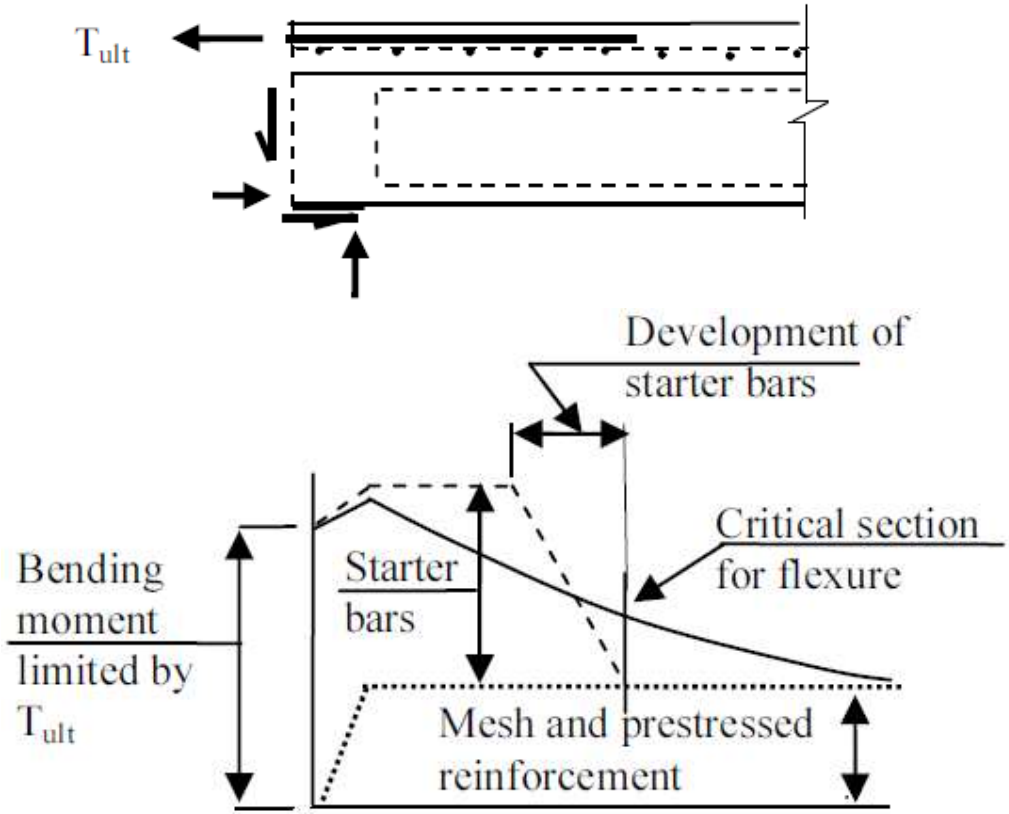

Potential failure modes

- **Positive moment failure near support**
  - Relative rotation beam-floor → close to support positive moment
  - Support – prestress is not fully developed

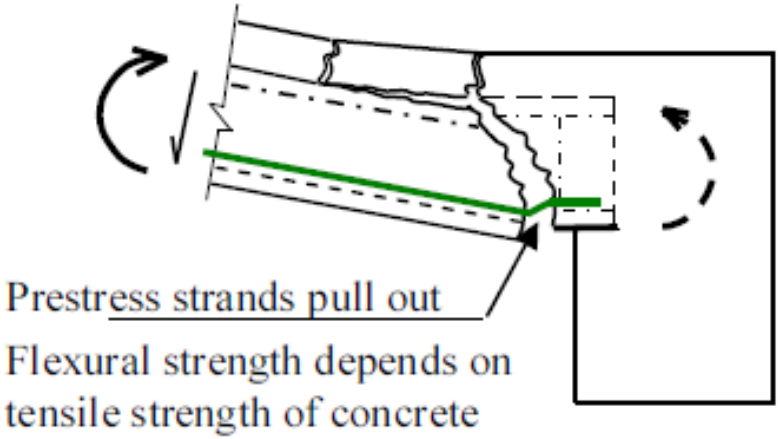

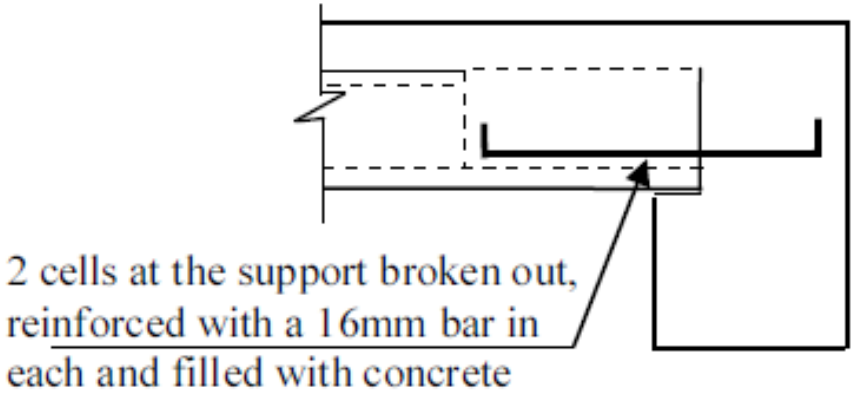

Potential failure modes

- **Torsion**
  - Differential deflection of supporting structure

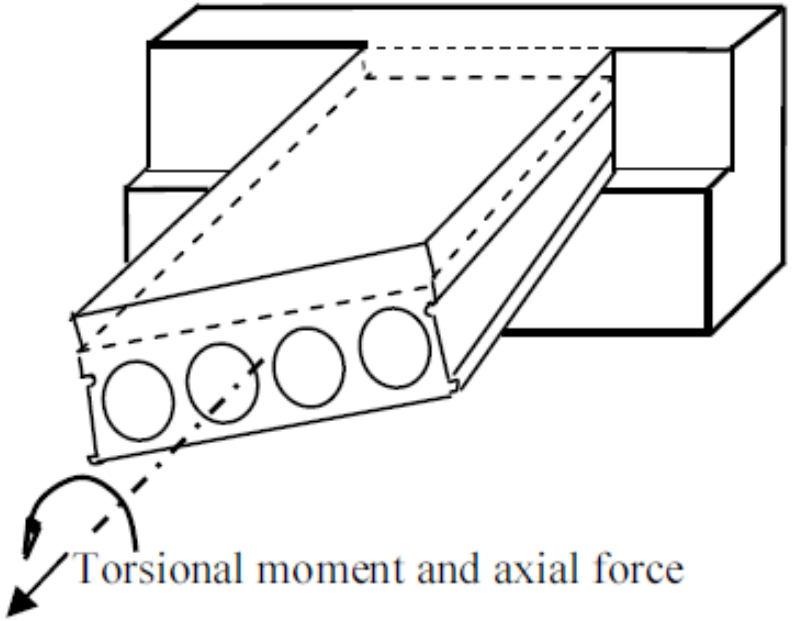

Potential failure modes

- **Torsion**
  - Differential deflection of supporting structure
  - Torsional cracking moment must be checked

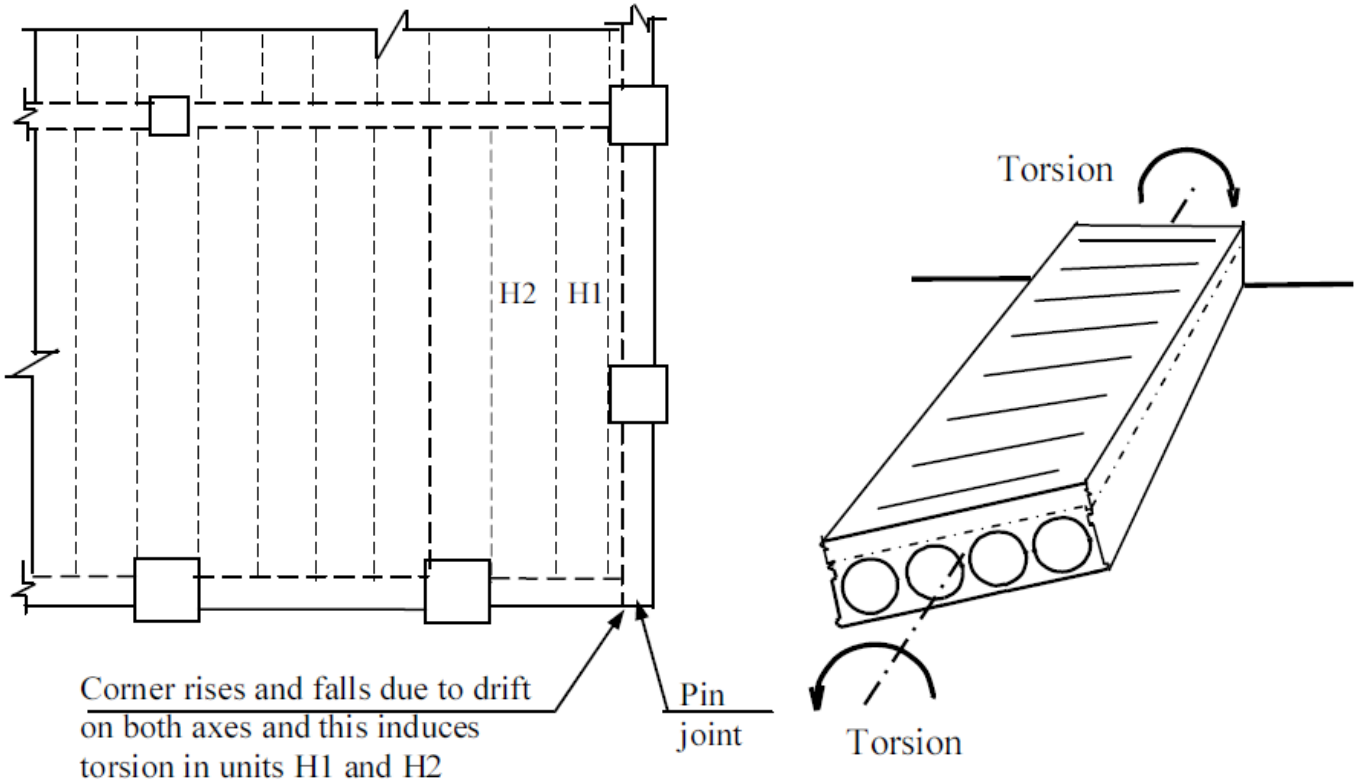

Thank you

- **References**

  - Fenwick, R., Bull, D., Gardiner, D., Assessment of hollow-core floors for seismic performance, University of Canterbury, 2010
  - Woods, L. J., Bull, D. K., Fenwick, R. C., The seismic performance of hollow-core flooring: the significance of negative bending moments, 14-th WCEE, 2008
  - Elliott, K. S., Precast concrete structures, B-H, 2002
  - EN 1998-1 : 2003
  - PCI, Manual for the design of hollow core slabs
  - ASCE/SEI 7-05, Minimum design loads for buildings and other structures
  - NZS 3101:Part1:2006
  - Fib 43 Structural connections for precast concrete buildings